Stucchi®

a constant flow of solutions

Quick Couplings Catalog

stucchigroup.com

PRODUCTS CATALOG

a constant flow of solutions

Index

Stucchi®

The Company

Founded in 1960 by the two brothers Tino and Renzo in the province of Bergamo (Northern Italy), today Stucchi is one of the major worldwide manufacturers of quick couplings and solutions for hydraulic power transmission.

The vision that drives us to the future is to be recognized by our customers as their supplier of choice for fluid power products and solutions that are easy to use, safe, long lasting, environmentally friendly and that help in saving energy.

Why choose Stucchi Quick Couplings

- Specialized in quick couplings
- We listen to the needs of our customers
- Full range of products and interchangeability
- We design and test innovative solutions
- We have a dedicated stock
- Diversified services for our clients
- Our products are suitable for many areas of applications
- Safety and respect for the environment first
- 100% Made in Italy production, with a global sales network

Stucchi in the world

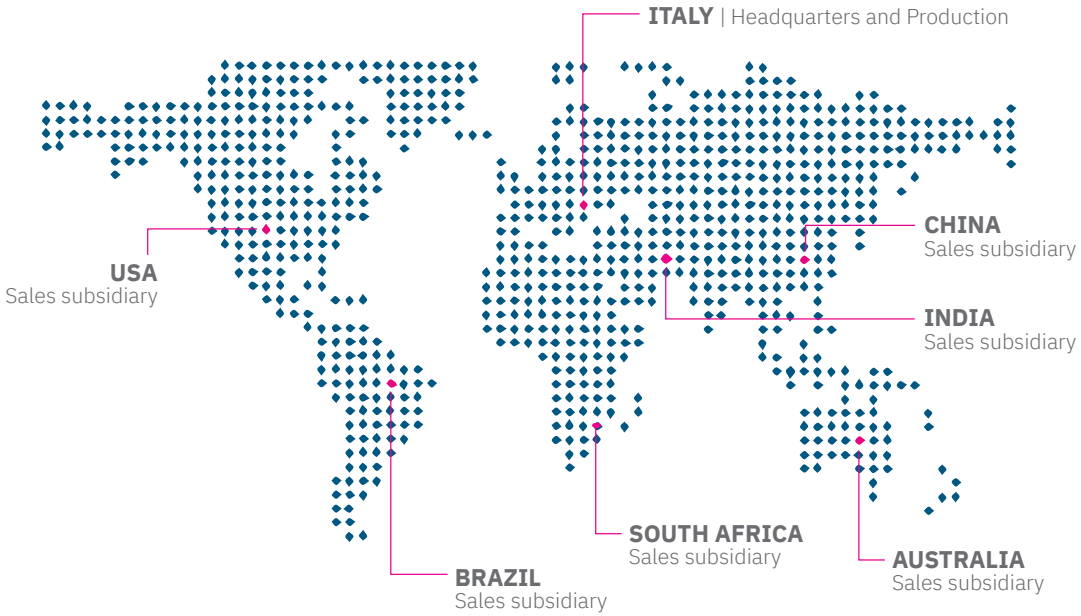

Support Tools

Stucchi Configurator

Use the intuitive filters to identify the right coupling part number for your needs.

Stucchi Multiconfigurator

Easily select the characteristics of the hydraulic system and find the percfect plate configuration you need.

Stucchi Interchange

With this tool you can obtain the Stucchi part number, starting from the competitors' code.

Stucchi Drawings

Download 2D and 3D drawings of Stucchi products; useful for designers in the development phase of a project.

Stucchi Videos

Watch product videos, tutorials and tips on Stucchi YouTube channel.

Stucchi Academy

We have made our training courses interactive and on demand; you can attend the course and increase your knowledge on quick couplings.

Technical question? We are here to help you!

Every application is different and it may be challenging to choose the solution that will bring the most value and benefit to your equipment. That's why STUCCHI has a team of product engineers ready to help you to facilitate your work in every step of the process. **From the choice of the most suitable product to the pressure drop calculation or material compatibility check, they are here to assist you in all your design challenges.**

For more information please contact Stucchi Technical Support.

WARNING

A defect, a wrong choice or an improper use of products, can cause injury to persons, animals and objects.
Connect under pressure products are suitable to be connected under residual (static) pressure.
Never connect or disconnect with dynamic pressure (e.g. pump on).
Make sure that the medium used is compatible with seal and material as indicated for each series.
In case of doubt please contact Stucchi Technical Support.
The interchangeability is mentioned under the assumption that the manufacturer of the considered products has not changed any dimension.
It is MANDATORY to read and closely follow the instructions. Last updated version always apply at time of installation, see latest written Instructions on Stucchi website (stucchigroup.com) before selecting or using Stucchi products.

Certifications

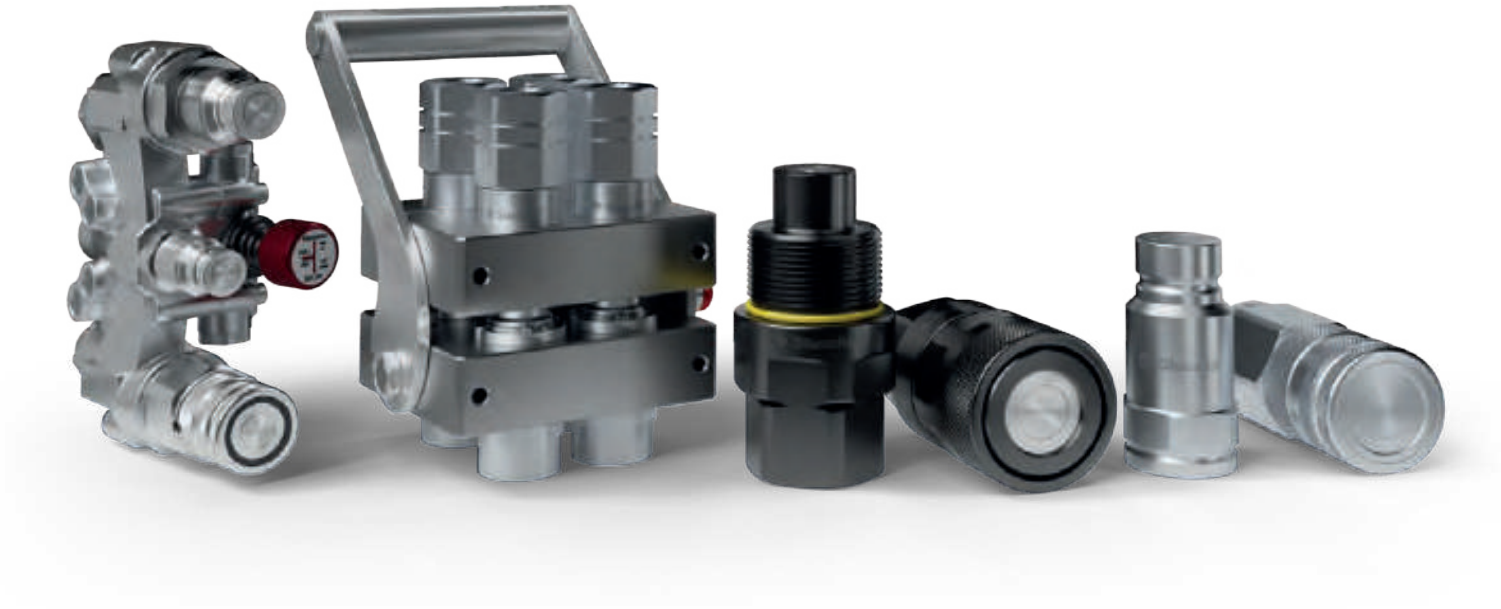

After certification of occupational health and safety management system (**ISO 45001**), Stucchi reached another major objective of the company policies through a careful performance of the service for the full compliance with national and international environmental management systems, certifying its model of business organization according to the **UNI EN ISO 14001:2004**.

ISO 14001 **ISO 9001** **ISO 45001**

Certifications available on request

Applications

The strength that distinguishes Stucchi in the market is a “constant flow of solutions” in the development, manufacturing and distribution of products for fluid connections.

The vision that drives us towards the future is to be recognized by our customers as the supplier of choice for fluid power products and solutions that are easy to use, safe, durable, environmentally friendly and that help in saving energy. Following these principles Stucchi offers solutions that cover a wide range of applications constantly ensuring the quality of products.

Earth moving

In this sector, hydraulic circuits must reach particularly high operating standards: high power levels, prolonged contact with debris and dust, and frequent replacement of tools, call for meticulous care in the design of the couplings to ensure maximum operating efficiency, preventing damage to machinery and injury to personnel.

Oil &Gas

The hydraulic circuits in this field must transmit the fluid dynamic power to the machinery required for the exploration, perforation and extraction (upstream), transportation and storage (midstream) of crude oil and natural gas. The upstream sector, where quick couplings are more commonly used, is subject to intense mechanical stress and challenging environmental conditions.

Vehicles

In the Vehicles sector, safety and durability are the keywords because a malfunction could cause serious injuries to staff and damages to property. Heavy vehicles use hydraulic circuits to connect trailers, to steer the wheels and operate suspensions: the ability of the couplings to withstand these demanding applications is essential.

Agriculture

Agricultural machinery requires frequent equipment changeovers to be carried out directly on-site: in these conditions, operations must be carried out quickly and safely to prevent contamination of both the circuit and the soil, which is the most precious resource of this sector.

Hydraulic tools

The need to manage high pressures is combined with the need for tool portability: the hydraulic lines that power tools, such as pneumatic hammers must be available for use in any environment and under any conditions, while maintaining the highest degree of performance and safety.

High pressure

Roadside assistance tools, such as shears, jacks and retractors, require high pressure and frequent connection and disconnection of the lines: in this field of application, the speed of operations can make the difference between life and death.

Refrigeration

Special couplings are used in vehicles air conditioning recharging stations, or in eutectic plates used on insulated vans transporting frozen and fresh products. These fields of use call for specific components, guaranteeing the absence of fluid or gas leaks, which would otherwise cause the machinery to malfunction.

Industry

Machinery which must apply a high force, such as sheet metal shearing systems and hot rolling mills, are powered by hydraulic circuits. In this context it is necessary to be able to remove individual segments for maintenance and inspection purposes, by disconnecting parts of the circuit without stopping the rest of production.

Cooling

Liquid cooling systems offer improved performances and require smaller dimensions compared to air systems: on the other hand, their use with electronic components in systems for rail transport, server-farms, etc. means there must be a total absence of leaks to prevent damage to the entire system.

Chemical & Food Industry

In this sector numerous machines are used that require hydraulic circuits to operate correctly.
The absence of leaks is a fundamental requirement for these applications when operating in an environment where the contamination of chemicals or foodstuffs with oil is inadmissible.

Family		Flat face						
SERIES	**TECHNICAL FEATURES**	FIRG 	A NEW / A 	APM 	A-HD 	AX 	FIRG-Q 	FL 
Interchange	ISO and/or reference markets	ISO 16028	ISO 16028	ISO 16028	ISO 16028	ISO 16028	ISO 16028	ISO 16028
Valve Style	Flat face	✓	✓	✓	✓	✓	✓	✓
	Non spill flat face							
	Ball							
	Poppet							
Connection / Disconnection system	Pushing/Pulling the sleeve	✓	✓	✓	✓	✓	✓	✓
	Single active sleeve							
	Push-Pull*							
	Screw							
	Lever/Knob							
	By Multicoupling							
Safety lock system	Safety ball	✓	✓	✓	✓	✓	✓	✓
	Screw							
	Pin/Cam							
	Double lock	✓	✓		✓	✓	✓	✓
Connection Under residual Pressure	One side			✓	✓			
	Both sides							
	With Easy CUP**			✓				
	Disconnection							
Material	Carbon steel	✓	✓	✓	✓		✓	
	Stainless steel					✓	✓	✓
	Aluminium							
	Brass							
Treatment	Zn-Ni		(✓)					
	Cr3	✓	✓	✓	✓			
	QPQ						✓	
	Other							
Standard seal (others upon request)	Nitrile NBR	✓	✓	✓	✓		✓	
	FKM (Viton®)					✓	✓	✓
	EPDM						✓	
	HNBR							
	Kalrez®						✓	
Fluid type (with standard seal)	Hydraulic oil	✓	✓	✓	✓	✓	✓	✓
	Water, Water&Glycol						✓	
Threads available (others upon request)	BSP	✓	✓	✓	✓	✓	✓	✓
	NPT	✓	✓	✓	✓		✓	✓
	SAE	✓	✓	✓	✓			✓
	METRIC		✓			✓		
	Other	✓	✓					
Sizes / Performances **Max. operating pressure (bar)** *Max suggested flow (l/min)*	1/8"		420 / 6					350 / 6
	1/4"	300 / 24	420 / 24				300 / 24	350 / 24
	3/8"	300 / 46	350 / 46	350 / 46	350 / 46	350 / 46	300 / 46	350 / 46
	1/2"	250 / 90	330 / 90	330 / 90	330 / 90	330 / 90	250 / 90	350 / 90
	5/8"	250 / 148	330 / 148	330 / 148			250 / 148	350 / 148
	3/4"	330 / 200	350 / 200 330 / 200	330 / 200		330 / 200	250 / 200	330 / 200
	1"	250 / 378	350 / 378 300 / 378	300 / 378		300 / 378	250 / 378	280 / 378
	1-1/4"		300 / 450 300 / 450					
	1-1/2"	200 / 750	270 / 750 270 / 750	270 / 750			200 / 750	230 / 750
	2"	200 / 1000					200 / 1000	150 / 1000
Typical applications	Earth moving	✓	✓	✓	✓			
	Oil&Gas	✓	✓	✓	✓	✓	✓	✓
	Vehicles	✓	✓	✓	✓			
	Agriculture	✓	✓	✓	✓			
	Industry	✓	✓	✓	✓	✓	✓	✓
	Hydraulic tools	✓	✓	✓	✓			
	High pressure							
	Refrigeration					✓		✓
	Cooling						✓	
	Chemical&Food industry					✓	✓	✓

Flat face screw			Multicouplings						
			Plates			Couplings			
VP-P	VEP-P	VEP-HD	DP	GR	GRE	FAP-ZN	FAP-HP	FAQ	CS
									
Stucchi profile	Stucchi profile	Stucchi profile	Stucchi profile	Stucchi profile	Stucchi profile	Stucchi profile (with DP, GR)	Stucchi profile (with GR)	Stucchi profile (with DP, GR)	Stucchi profile (with GRE)
✓	✓	✓	✓	✓	✓	✓	✓	✓	✓
✓	✓	✓							
			✓	✓	✓				
			✓	✓	✓	✓	✓	✓	✓
✓	✓	✓							
			✓	✓	✓				
✓		safety pin (HDL)	✓	✓	✓				
✓	✓	✓	see FAP-ZN, FAQ	see FAP-ZN, FAP-HP,FAQ	see CS	✓	✓		
✓	✓	✓				✓	✓		
✓	✓	✓				✓	✓		
✓	✓	✓	✓	✓		✓	✓	✓	
								✓	
			✓		✓				
				✓					✓
✓	✓	✓	✓	✓		✓			
✓	✓						✓		
✓	✓	✓					✓	✓	
✓	✓	✓	see FAP-ZN, FAQ	see FAP-ZN, FAP-HP,FAQ	see CS	✓	✓	✓	✓
								✓	
								✓	
✓	✓	✓	see FAP-ZN, FAP-HP,FAQ	see FAP-ZN, FAP-HP,FAQ	see CS	✓	✓	✓	✓
								✓	✓
✓	✓	✓	✓	✓	✓	✓		✓	✓
✓	✓	✓	✓	✓	✓	✓	✓	✓	✓
✓	✓	✓	✓	✓		✓			
		✓							
600 / 24	600 / 24								
550 / 46	550 / 46					350 / 46	700 / 46	20 / 46	10 / 46
550 / 90	550 / 90					330 / 90		20 / 90	10 / 90
550 / 148	550 / 148	550 / 148				330 / 148		20 / 148	
500 / 200	500 / 200	500 / 200	see FAP-ZN, FAQ	see FAP-ZN, FAP-HP,FAQ	see CS	330 / 200		20 / 200	
470 / 378	470 / 378	470 / 378				300 / 378			
		420 / 576							
400 / 750	400 / 750	400 / 750							
	350 / 1000								
✓	✓	✓	✓	✓		✓			
✓	✓	✓	✓	✓	✓	✓			✓
✓	✓	✓	✓	✓		✓			
			✓	✓		✓			
✓	✓	✓	✓	✓	✓	✓	✓	✓	✓
✓	✓	✓	✓	✓		✓	✓		
							✓		
					✓			✓	✓

Family		Casting	Poppet screw				Poppet	
SERIES	**TECHNICAL FEATURES**	SATURN 3 	VD 	VOF 	VOFX 	VR 	BIR 	I/IP 
Interchange	ISO and/or reference markets	ISO 16028	ISO 14541	Oil&Gas couplings	Oil&Gas couplings	Rohrleitung couplings	ISO 7241 A	ISO 7241 A
Valve Style	Flat face	✓						
	Non spill flat face					✓		
	Ball							
	Poppet		✓	✓	✓		✓	✓
Connection / Disconnection system	Pushing/Pulling the sleeve	✓						
	Single active sleeve						✓	
	Push-Pull*							✓
	Screw		✓	✓	✓	✓		
	Lever/Knob							
	By Multicoupling							
Safety lock system	Safety ball	✓					✓	✓
	Screw		✓	✓	✓	✓		
	Pin/Cam							
	Double lock							
Connection Under residual Pressure	One side	✓	✓	✓	✓	✓	BIR-PC	
	Both sides							
	With Easy CUP**	✓						
	Disconnection	✓						
Material	Carbon steel	✓	✓	✓		✓	✓	✓
	Stainless steel				✓			
	Aluminium							
	Brass							
Treatment	Zn-Ni							
	Cr3	✓	✓	✓		✓	✓	✓
	QPQ							
	Other							
Standard seal (others upon request)	Nitrile NBR	✓	✓	✓	✓	✓	✓	✓
	FKM (Viton®)							
	EPDM							
	HNBR							
	Kalrez®							
Fluid type (with standard seal)	Hydraulic oil	✓	✓	✓	✓	✓	✓	✓
	Water, Water&Glycol							
Threads available (others upon request)	BSP		✓	✓	✓	(✓)	✓	✓
	NPT			✓	✓		✓	✓
	SAE	✓		(✓)	(✓)		(✓)	
	METRIC		✓			✓		✓
	Other	✓					✓	
Sizes / Performances **Max. operating pressure (bar)** *Max suggested flow (l/min)*	1/8"							
	1/4"		**450** / *24*				**350** / *12*	**350** / *24*
	3/8"		**450** / *46*			**400** / *46*	**300** / *46*	**300** / *46*
	1/2"	**350** / *90*	**400** / *90*			**300** / *90*	**250** / *90*	**250** / *90*
	5/8"	**350** / *148*						
	3/4"	**350** / *200*	**400** / *148*	**345** / *212*	**207** / *212*	**350** / *212*	**250** / *148*	**250** / *148*
	1"		**300** / *200*	**345** / *378*	**207** / *378*	**300** / *378*	**230** / *200*	**250** / *200*
	1-1/4"		**300** / *378*	**345** / *576*	**207** / *576*	**420** / *576*	**230** / *378*	
	1-1/2"			**345** / *758*	**207** / *758*		**180** / *750*	
	2"			**345** / *1100*	**207** / *1100*		**130** / *1000*	
Typical applications	Earth moving	✓	✓	✓	✓	✓		
	Oil&Gas			✓	✓			
	Vehicles		✓			✓		
	Agriculture						✓	✓
	Industry				✓		✓	✓
	Hydraulic tools	✓	✓			✓		
	High pressure							
	Refrigeration							
	Cooling							
	Chemical&Food industry							

Poppet								High pressure		Check valve
IR	IR-V	IFR	IRB	IRBO	IRBX	IRC	IRCX	A-HP	IV-HP	VUZ
										
Similar couplings	Similar couplings	ISO 5676	ISO 7241 B	ISO 7241 B	ISO 7241 B	Nordic couplings	Nordic couplings	Stucchi profile	Similar couplings	-
								✓		
		✓								
✓									✓	
	✓		✓	✓	✓	✓	✓			
								✓		
✓	✓	✓	✓	✓	✓	✓	✓			
									✓	
✓	✓	✓	✓	✓	✓	✓	✓	✓		
									✓	
						✓	✓	✓		
						IRC-PC				
✓	✓	✓	✓			✓		✓	✓	✓
					✓		✓			
				✓	✓					
						✓				
✓	✓	✓	✓					✓	✓	✓
										(VU)
✓	✓	✓	✓			✓		✓	✓	
				✓	✓		✓			
✓	✓	✓	✓	✓	✓	✓	✓	✓	✓	✓
								✓		
✓	✓	✓	✓	✓	✓	✓	✓	✓		✓
✓	✓		✓	✓	✓	✓		✓	✓	✓
	(✓)		(✓)	(✓)	(✓)	(✓)	(✓)			✓
		✓								
			350/6	200/6	250/6			700/6		400/6
300/20	300/24		350/24	200/24	250/24	450/24	300/24	700/24	700/12	350/24
300/46	300/46	150/46	300/46	160/46	200/46	350/46	300/46	700/46	700/23	350/46
250/90	250/90		280/90	160/90	200/90	330/90	300/90			300/90
250/148	250/148		230/148	125/148	160/148	330/212	200/212			300/148
200/150	200/200		180/200	100/200	125/200	330/378	200/378			300/200
										250/378
										250/600
										150/1000
						✓	✓			✓
			✓	✓	✓					✓
						✓	✓			✓
✓	✓	✓				✓	✓			✓
✓	✓		✓	✓	✓					✓
						✓	✓	✓	✓	✓
								✓	✓	
				✓	✓					
			✓	✓	✓					

KEY:

* PUSH-PULL BREAKAWAY:
Stucchi system that avoids breaking the circuit in case the operator does not disconnect properly the couplings.

Easy CUP

** EASY CONNECTION UNDER PRESSURE:
Stucchi solution for manual connection with residual pressure in the circuit, thanks to the triple valve system in the male.

BOP

BLOW OUT PREVENTION:
Specific dimensions are fire tested and Lloyd certified in accordance with API 16D and the EUB Directive #36.

(✓)
Option available upon request.

✓
Available as an alternative to the standard version.

Flat Face

FIRG p. 19

Valving style: Flat face
Interchange: ISO 16028
Sealing description: Nitrile NBR
Available sizes: From 1/4” to 2”
Operating pressure: Up to 330 bar
Flow rate: Up to 1000 l/min
Material / Treatment:
Carbon steel / Cr3

A NEW / A p. 27

Valving style: Flat face
Interchange: ISO 16028
Sealing description: Nitrile NBR
Available sizes: From 1/8” to 1-1/2”
Operating pressure: Up to 420 bar
Flow rate: Up to 750 l/min
Material / Treatment:
Carbon steel / Cr3

APM p. 51

Valving style: Flat face
Interchange: ISO 16028
Sealing description: Nitrile NBR
Available sizes: From 3/8” to 1-1/2”
Operating pressure: Up to 350 bar
Flow rate: Up to 750 l/min
Material / Treatment:
Carbon steel / Cr3
Connection under pressure:
One side only

A-HD p. 57

Valving style: Flat face
Interchange: ISO 16028
Sealing description: Nitrile NBR
Available sizes: From 3/8” to 1/2”
Operating pressure: Up to 350 bar
Flow rate: Up to 90 l/min
Material / Treatment:
Carbon steel / Cr3
Connection under pressure:
One side only

AX p. 63

Valving style: Flat face
Interchange: ISO 16028
Sealing description: FKM (Viton®)
Available sizes: From 3/8" to 1”
Operating pressure: Up to 350 bar
Flow rate: Up to 378 l/min
Material / Treatment:
Stainless steel (AISI 316L)

FIRG-Q p. 71

Valving style: Flat face
Interchange: ISO 16028
Sealing description: Nitrile NBR-FKM(Viton®)-EPDM-Kalrez®
Available sizes: From 1/4” to 2”
Operating pressure: Up to 300 bar
Flow rate: Up to 1000 l/min
Material / Treatment:
Carbon steel+Stainless steel/ QPQ

FL p. 79

Valving style: Flat face
Interchange: ISO 16028
Sealing description: FKM (Viton®)
Available sizes: From 1/8” to 2”
Operating pressure: Up to 350 bar
Flow rate: Up to 1000 l/min
Material / Treatment:
Stainless steel (AISI 316L)

FIRGSERIES

INTERCHANGE > **ISO 16028 - NFPA T3.20.15 - HTMA (size 3/8")**

Stucchi®

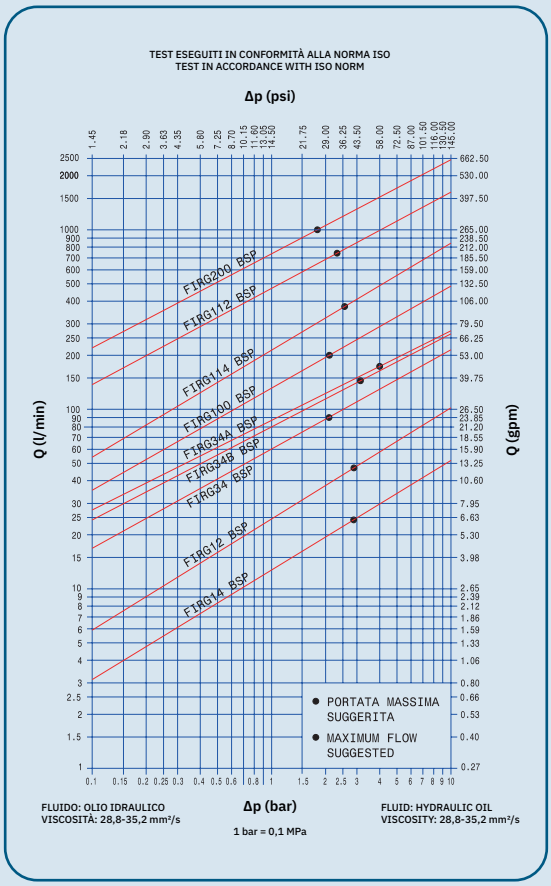

TECHNICAL FEATURES AND OPTIONS

Interchange
ISO 16028
NFPA T3.20.15
HTMA (size 3/8")

Sealing description
Nitrile NBR

Connection system
Push

Available sizes
from 1/4"
to 2"

Material /treatment
Carbon steel
/Cr3

Available threads
BSP - NPT - BSPT
- SAE

Operating pressure
Up to 330 bar

Locking mechanism
Locking ball +
Safety Lock

Flow rate
Up to 1000 l/min

Temperature (°C)
-20°C / +100°C

Valving style
Flat face

Connection under pressure
Connection: not allowed
Disconnection: not allowed

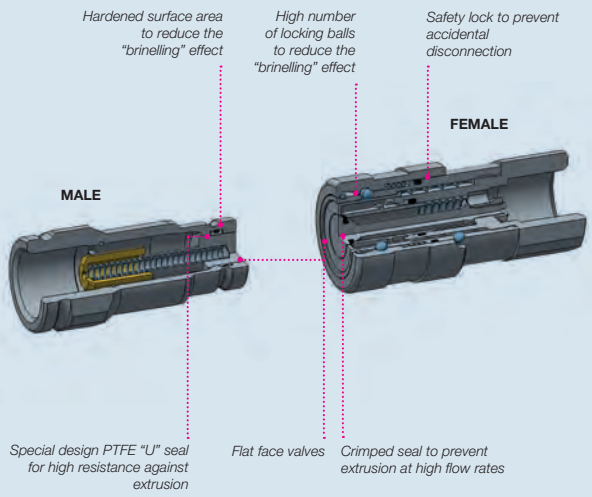

BENEFITS

- Flat face is easy to clean, reducing the inclusion of contamination inside the hydraulic circuit.
- Minimal fluid spillage during disconnection, reducing fluid spillage to the environment.
- Minimal air inclusion during connection, enhancing correct function of the circuit.
- Linear flow reduces internal turbulence and pressure drop maintaining circuit efficiency.
- Good resistance to pressure impulses when the couplings are connected.
- Compact slim design.
- Safe and simple to use.

HOW TO USE

- Before to connect, clean the mating surface of the couplings to avoid dirt inclusion in the circuit.
- To connect push the male half towards the female half or vice versa.
- After connection turn the external sleeve to engage safety lock function, to prevent accidental disconnection.
- To disconnect turn the external sleeve until the sleeve lock notch match the safety lock ball and push back the sleeve.

MAIN APPLICATIONS

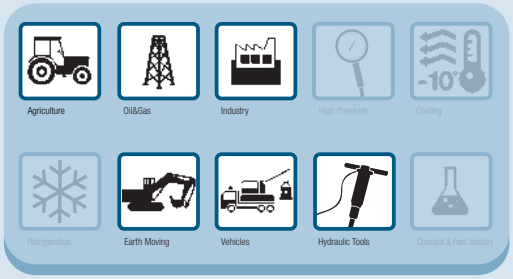

Stucchi®

PERFORMANCES

Size		Series/Size		Max. flow suggested		Connect force		Disconnect force		Spillage*
in	mm (ISO)	OLD	NEW	l/min	gpm	N	lbf	N	lbf	ml
1/4	6,3	FIRG14	FIRG7	24	6,36	140	31,50	40	9,00	0,01
3/8	10,0	FIRG38-12	FIRG9	46	12,19	150	33,75	40	9,00	0,01
1/2	12,5	FIRG12A-34	FIRG13	90	23,85	160	36,00	60	13,50	0,02
5/8	16,0	FIRG34B	FIRG15	148	39,22	180	40,50	55	12,38	0,02
3/4	19,0	FIRG34A	FIRG17 3/4	170	45,05	270	60,75	90	20,25	0,03
3/4	19,0	FIRG100	FIRG17 1	200	53,00	240	54,00	65	14,63	0,03
1	25,0	FIRG114	FIRG21	378	100,17	310	69,75	100	22,50	0,03
1-1/2	38,0	FIRG112	FIRG30	750	198,75	390	87,75	90	20,25	0,05
2	51,0	FIRG200	FIRG45	1000	265,00	470	105,75	100	22,50	0,1

Size	Series/Size		Max. operating pressure						Burst pressure					
			Coupled		Male		Female		Coupled		Male		Female	
in	OLD	NEW	MPa	psi	MPa	psi	MPa	psi	MPa	psi	MPa	psi	MPa	psi
1/4	FIRG14	FIRG7	30	4350	42	6090	12	1740	120	17400	126	18270	48	6960
3/8	FIRG38-12	FIRG9	30	4350	30	4350	12	1740	120	17400	120	17400	48	6960
1/2	FIRG12A-34	FIRG13	25	3625	25	3625	10	1450	100	14500	100	14500	40	5800
5/8	FIRG34B	FIRG15	25	3625	22	3190	10	1450	100	14500	88	12760	40	5800
3/4	FIRG34A	FIRG17 3/4	33	4785	33	4785	33	4785	100	14500	100	14500	100	14500
3/4	FIRG100	FIRG17 1	25	3625	20	2900	10	1450	100	14500	80	11600	40	5800
1	FIRG114	FIRG21	25	3625	20	2900	10	1450	100	14500	80	11600	40	5800
1-1/2	FIRG112	FIRG30	20	2900	27	3915	8	1160	80	11600	80	11600	32	4640
2	FIRG200	FIRG45	20	2900	16	2320	8	1160	80	11600	64	9280	32	4640

* Spillage is an indicative value of the fluid loss during disconnection (according to ISO norm test method).

Different possible configurations:
BSPT thread available upon request.

Temperature range:
Standard seals NBR (Nitrile): from -20 °C to +100 °C (from -4 °F to +212 °F).
Upon request seals in FKM (VITON®): form -15°C to +180°C (from +5 °F to +356 °F).
Please read carefully Instructions and warnings for proper selection of the products.

Tests:
Qualification tests have been performed with hydraulic oil using couplings with NBR (Nitrile) seals.
The max. operating pressure has been verified for 100.000 impulses according to ISO norm test method.

WARNING

A defect, a wrong choice or an improper use of products, can cause injury to persons, animals and objects.
Never connect or disconnect with dynamic pressure (e.g. pump on).
Do not use the female coupling disconnected with high impulse pressure.
Do not couple-uncouple with flow and/or pressure in the circuit.
Do not couple-uncouple when the temperature inside of the circuit is higher than 80 °C (176 °F).
Check the maximum allowable working pressure of the port in use.
Make sure that the medium used is compatible with seal and material as indicated for each series.
In case of doubt please contact Stucchi Technical Support.
The interchangeability is mentioned under the assumption that the manufacturer of the considered products has not changed any dimension.
It is mandatory to carefully read and closely follow the instructions before selecting or using any Stucchi products.
Always refer to the version uploaded in the Instructions and warning section of stucchigroup.com website for the latest release.
For specific, product-related, instructions, please contact Stucchi technical service.

FIRGSERIES

Stucchi®

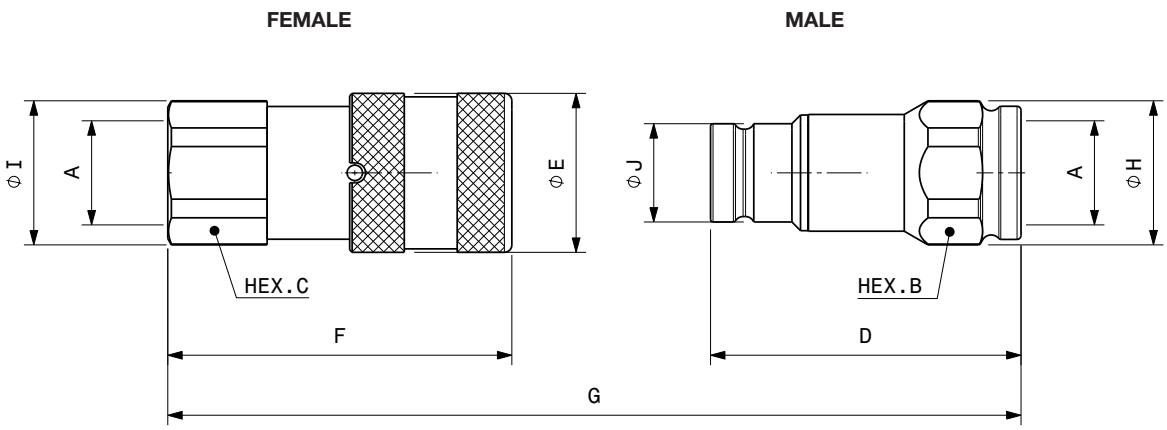

Port description: FEMALE THREAD BSPP (ISO1179-1)

BODY SIZE	Descriptive Code OLD	Descriptive Code NEW	Item Code		ISO DN	PORT (A)	Overall Length			Length			Hex			Diameter			Diameter			Weight	
								mm	in		mm	in		mm	in		mm	in		mm	in	kg	lb
1/4"	F FIRG 14 BSP	F FIRG7 1/4 BSP	Female	800800000	6,3	1/4"	G	85,2	3,35	F	48,1	1,89	C	22,0	0,87	I	23,8	0,94	E	28,0	1,10	0,14	0,31
	M FIRG 14 BSP	M FIRG7 1/4 BSP	Male	800800001						D	47,9	1,89	B	22,0	0,87	H	23,8	0,94	J	16,1	0,63	0,09	0,19
3/8"	F FIRG 38 BSP	F FIRG9 3/8 BSP	Female	800800004	10	3/8"	G	108,7	4,28	F	64,2	2,53	C	27,0	1,06	I	29,0	1,14	E	32,0	1,26	0,24	0,52
	M FIRG 38 BSP	M FIRG9 3/8 BSP	Male	800800005						D	60,0	2,36	B	24,0	0,94	H	26,0	1,02	J	19,7	0,78	0,12	0,27
3/8"	F FIRG 12 BSP	F FIRG9 1/2 BSP	Female	800800002	10	1/2"	G	116,2	4,57	F	69,2	2,72	C	27,0	1,06	I	29,0	1,14	E	32,0	1,26	0,24	0,52
	M FIRG 12 BSP	M FIRG9 1/2 BSP	Male	800800003						D	62,5	2,46	B	27,0	1,06	H	29,0	1,14	J	19,7	0,78	0,13	0,28
1/2"	F FIRG 12A BSP	F FIRG13 1/2 BSP	Female	800800006	12,5	1/2"	G	124,5	4,90	F	73,8	2,91	C	32,0	1,26	I	33,8	1,33	E	38,0	1,50	0,38	0,83
	M FIRG 12A BSP	M FIRG13 1/2 BSP	Male	800800007						D	68,0	2,68	B	32,0	1,26	H	33,8	1,33	J	24,5	0,96	0,23	0,51
1/2"	F FIRG 34 BSP	F FIRG13 3/4 BSP	Female	800800008	12,5	3/4"	G	134,0	5,28	F	80,8	3,18	C	36,0	1,42	I	38,5	1,52	E	38,0	1,50	0,41	0,91
	M FIRG 34 BSP	M FIRG13 3/4 BSP	Male	800800009						D	70,5	2,78	B	36,0	1,42	H	38,5	1,52	J	24,5	0,96	0,23	0,50
5/8"	F FIRG 34B BSP	F FIRG15 3/4 BSP	Female	800800010	16	3/4"	G	131,4	5,17	F	78,5	3,09	C	36,0	1,42	I	38,5	1,52	E	42,0	1,65	0,48	1,06
	M FIRG 34B BSP	M FIRG15 3/4 BSP	Male	800800011						D	70,5	2,78	B	36,0	1,42	H	38,5	1,52	J	27,0	1,06	0,27	0,59
3/4"	F FIRG 34A BSP	F FIRG17 3/4 BSP	Female	800800020	19	3/4"	G	149,0	5,87	F	88,7	3,49	C	41,0	1,61	I	44,8	1,76	E	48,0	1,89	0,75	1,65
	M FIRG 34A BSP	M FIRG17 3/4 BSP	Male	800800021						D	82,3	3,24	B	41,0	1,61	H	44,8	1,76	J	30,0	1,18	0,45	0,98
3/4"	F FIRG 100 BSP	F FIRG17 1 BSP	Female	800800012	19	1"	G	153,5	6,04	F	93,2	3,67	C	45,0	1,77	I	47,8	1,88	E	48,0	1,89	0,77	1,69
	M FIRG 100 BSP	M FIRG17 1 BSP	Male	800800013						D	82,3	3,24	B	45,0	1,77	H	47,8	1,88	J	30,0	1,18	0,39	0,87
1"	F FIRG 114 BSP	F FIRG21 1-1/4 BSP	Female	800800014	25	1-1/4"	G	172,8	6,80	F	106,0	4,17	C	55,0	2,17	I	59,8	2,35	E	55,0	2,17	1,22	2,68
	M FIRG 114 BSP	M FIRG21 1-1/4 BSP	Male	800800015						D	89,8	3,54	B	55,0	2,17	H	59,8	2,35	J	36,0	1,42	0,64	1,41
1-1/2"	F FIRG 112 BSP	F FIRG30 1-1/2 BSP	Female	800800016	38	1-1/2"	G	214,9	8,46	F	132,4	5,21	C	65,0	2,56	I	72,0	2,83	E	80,0	3,15	2,82	6,22
	M FIRG 112 BSP	M FIRG30 1-1/2 BSP	Male	800800017						D	111,1	4,37	B	65,0	2,56	H	69,8	2,75	J	57,0	2,24	1,67	3,67
2"	F FIRG 200 BSP	F FIRG45 2 BSP	Female	800800018	51	2"	G	241,5	9,51	F	156,6	6,17	C	80,0	3,15	I	88,5	3,48	E	100,0	3,94	5,10	11,24
	M FIRG 200 BSP	M FIRG45 2 BSP	Male	800800019						D	123,8	4,87	B	75,0	2,95	H	83,5	3,29	J	73,0	2,87	2,26	4,98

FIRGSERIES

Stucchi®

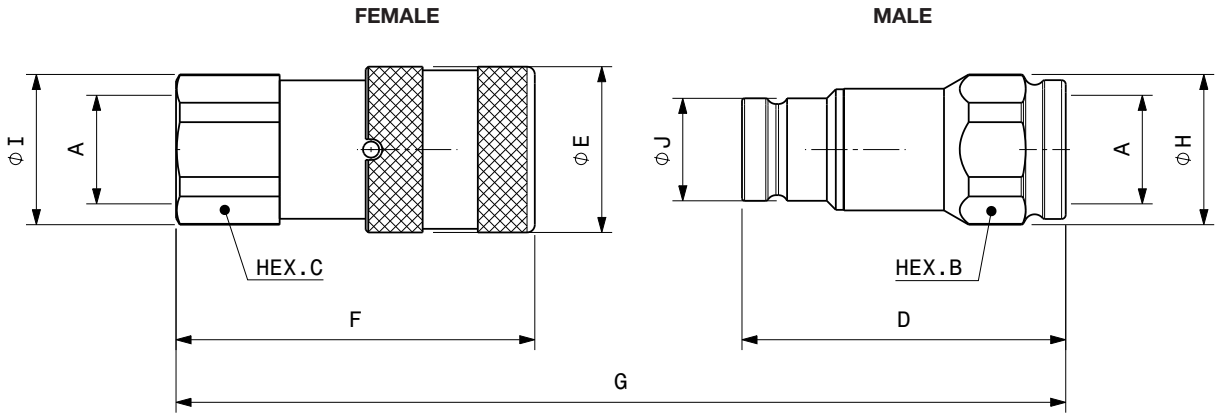

Port description: FEMALE THREAD NPT (ANSI B.1.20.1)

BODY SIZE	Descriptive Code OLD	Descriptive Code NEW	Item Code		ISO DN	PORT (A)	Overall Length mm	Overall Length in		Length mm	Length in	Hex mm	Hex in	Diameter mm	Diameter in	Diameter mm	Diameter in	Weight kg	Weight lb
1/4"	F FIRG 14 NPT	F FIRG7 1/4 NPT	Female	800801000	6,3	1/4"	G	85,2	3,35	F 48,1	1,89	C 22,0	0,87	I 23,8	0,94	E 28,0	1,10	0,14	0,31
	M FIRG 14 NPT	M FIRG7 1/4 NPT	Male	800801001						D 47,9	1,89	B 22,0	0,87	H 23,8	0,94	J 16,1	0,63	0,09	0,19
3/8"	F FIRG 38 NPT	F FIRG9 3/8 NPT	Female	800801004	10	3/8"	G	108,7	4,28	F 64,2	2,53	C 27,0	1,06	I 29,0	1,14	E 32,0	1,26	0,24	0,52
	M FIRG 38 NPT	M FIRG9 3/8 NPT	Male	800801005						D 60,0	2,36	B 24,0	0,94	H 26,0	1,02	J 19,7	0,78	0,12	0,27
3/8"	F FIRG 12 NPT	F FIRG9 1/2 NPT	Female	800801002	10	1/2"	G	116,2	4,57	F 69,2	2,72	C 27,0	1,06	I 29,0	1,14	E 32,0	1,26	0,24	0,53
	M FIRG 12 NPT	M FIRG9 1/2 NPT	Male	800801003						D 62,5	2,46	B 27,0	1,06	H 29,0	1,14	J 19,7	0,78	0,13	0,29
1/2"	F FIRG 12A NPT	F FIRG13 1/2 NPT	Female	800801006	12,5	1/2"	G	124,5	4,90	F 73,8	2,91	C 32,0	1,26	I 33,8	1,33	E 38,0	1,50	0,38	0,83
	M FIRG 12A NPT	M FIRG13 1/2 NPT	Male	800801007						D 68,0	2,68	B 32,0	1,26	H 33,8	1,33	J 24,5	0,96	0,24	0,52
1/2"	F FIRG 34 NPT	F FIRG13 3/4 NPT	Female	800801008	12,5	3/4"	G	134,0	5,28	F 80,8	3,18	C 36,0	1,42	I 38,5	1,52	E 38,0	1,50	0,42	0,93
	M FIRG 34 NPT	M FIRG13 3/4 NPT	Male	800801009						D 70,5	2,78	B 36,0	1,42	H 38,5	1,52	J 24,5	0,96	0,23	0,52
5/8"	F FIRG 34B NPT	F FIRG15 3/4 NPT	Female	800801010	16	3/4"	G	131,4	5,17	F 78,5	3,09	C 36,0	1,42	I 38,5	1,52	E 42,0	1,65	0,49	1,08
	M FIRG 34B NPT	M FIRG15 3/4 NPT	Male	800801011						D 70,5	2,78	B 36,0	1,42	H 38,5	1,52	J 27,0	1,06	0,27	0,60
3/4"	F FIRG 34A NPT	F FIRG17 3/4 NPT	Female	800801020	19	3/4"	G	149,0	5,87	F 88,7	3,49	C 41,0	1,61	I 44,8	1,76	E 48,0	1,89	0,76	1,66
	M FIRG 34A NPT	M FIRG17 3/4 NPT	Male	800801021						D 82,3	3,24	B 41,0	1,61	H 44,8	1,76	J 30,0	1,18	0,45	0,99
3/4"	F FIRG 100 NPT	F FIRG17 1 NPT	Female	800801012	19	1"	G	153,5	6,04	F 93,2	3,67	C 45,0	1,77	I 47,8	1,88	E 48,0	1,89	0,78	1,72
	M FIRG 100 NPT	M FIRG17 1 NPT	Male	800801013						D 82,3	3,24	B 45,0	1,77	H 47,8	1,88	J 30,0	1,18	0,41	0,89
1"	F FIRG 114 NPT	F FIRG21 1-1/4 NPT	Female	800801014	25	1 1/4"	G	172,8	6,80	F 106,0	4,17	C 55,0	2,17	I 59,8	2,35	E 55,0	2,17	1,22	2,68
	M FIRG 114 NPT	M FIRG21 1-1/4 NPT	Male	800801015						D 89,8	3,54	B 55,0	2,17	H 59,8	2,35	J 36,0	1,42	0,66	1,46
1-1/2"	F FIRG 112 NPT	F FIRG30 1-1/2 NPT	Female	800801016	38	1 1/2"	G	214,9	8,46	F 132,4	5,21	C 65,0	2,56	I 72,0	2,83	E 80,0	3,15	2,85	6,28
	M FIRG 112 NPT	M FIRG30 1-1/2 NPT	Male	800801017						D 111,1	4,37	B 65,0	2,56	H 69,8	2,75	J 57,0	2,24	1,67	3,68
2"	F FIRG 200 NPT	F FIRG45 2 NPT	Female	800801018	51	2"	G	241,5	9,51	F 156,6	6,17	C 80,0	3,15	I 88,5	3,48	E 100,0	3,94	5,10	11,24
	M FIRG 200 NPT	M FIRG45 2 NPT	Male	800801019						D 123,8	4,87	B 75,0	2,95	H 83,5	3,29	J 73,0	2,87	2,26	4,98

FIRGSERIES

Stucchi®

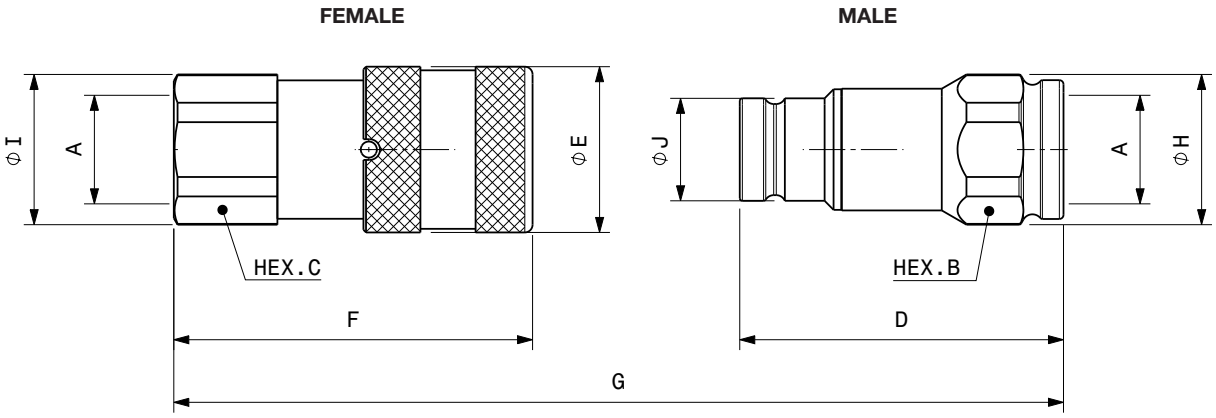

Port description: FEMALE THREAD SAE (ISO 11926-1 & SAE J1926-1)

BODY SIZE	Descriptive Code OLD	Descriptive Code NEW	Item Code		ISO DN	PORT (A)	Overall Length	mm	in		Length mm	Length in		Hex mm	Hex in		Diameter mm	Diameter in		Diameter mm	Diameter in	Weight kg	Weight lb
1/4"	F FIRG 14 3/8 SAE	F FIRG7 3/8 SAE	Female	800804000	6,3	9/16-18UNF	G	93,2	3,67	F	53,1	2,09	C	22,0	0,87	I	23,8	0,94	E	28,0	1,10	0,15	0,33
	M FIRG 14 3/8 SAE	M FIRG7 3/8 SAE	Male	800804001						D	50,9	2,00	B	22,0	0,87	H	23,8	0,94	J	16,1	0,63	0,09	0,20
3/8"	F FIRG 38 1/2 SAE	F FIRG9 1/2 SAE	Female	800804002	10	3/4-16UNF	G	116,2	4,57	F	69,2	2,72	C	27,0	1,06	I	29,0	1,14	E	32,0	1,26	0,24	0,54
	M FIRG 38 1/2 SAE	M FIRG9 1/2 SAE	Male	800804003						D	62,5	2,46	B	27,0	1,06	H	29,0	1,14	J	19,7	0,78	0,14	0,31
3/8"	F FIRG 12 5/8 SAE	F FIRG9 5/8 SAE	Female	800804004	10	7/8-14UNF	G	119,7	4,71	F	71,2	2,80	C	30,0	1,18	I	32,0	1,26	E	32,0	1,26	0,26	0,57
	M FIRG 12 5/8 SAE	M FIRG9 5/8 SAE	Male	800804005						D	64,0	2,52	B	30,0	1,18	H	32,0	1,26	J	19,7	0,78	0,15	0,32
1/2"	F FIRG 12A 5/8 SAE	F FIRG13 5/8 SAE	Female	800804006	12,5	7/8-14UNF	G	129,0	5,08	F	76,3	3,00	C	32,0	1,26	I	33,8	1,33	E	38,0	1,50	0,38	0,83
	M FIRG 12A 5/8 SAE	M FIRG13 5/8 SAE	Male	800804007						D	70,0	2,76	B	32,0	1,26	H	33,8	1,33	J	24,5	0,96	0,23	0,51
1/2"	F FIRG 34 SAE	F FIRG13 3/4 SAE	Female	800804008	12,5	1-1/16-12UN	G	138,0	5,43	F	83,3	3,28	C	36,0	1,42	I	38,5	1,52	E	38,0	1,50	0,42	0,93
	M FIRG 34 SAE	M FIRG13 3/4 SAE	Male	800804009						D	72,0	2,83	B	36,0	1,42	H	38,5	1,52	J	24,5	0,96	0,23	0,51
5/8"	F FIRG 34B SAE	F FIRG15 3/4 SAE	Female	800804010	16	1-1/16-12UN	G	137,9	5,43	F	83,5	3,29	C	36,0	1,42	I	38,5	1,52	E	42,0	1,65	0,50	1,10
	M FIRG 34B SAE	M FIRG15 3/4 SAE	Male	800804011						D	72,0	2,83	B	36,0	1,42	H	38,5	1,52	J	27,0	1,06	0,27	0,59
3/4"	F FIRG 34A SAE	F FIRG17 3/4 SAE	Female	800804020	19	1-1/16-12UN	G	149,0	5,87	F	88,7	3,49	C	41,0	1,61	I	44,8	1,76	E	48,0	1,89	0,75	1,64
	M FIRG 34A SAE	M FIRG17 3/4 SAE	Male	800804021						D	82,3	3,24	B	41,0	1,61	H	44,8	1,76	J	30,0	1,18	0,44	0,97
3/4"	F FIRG 100 SAE	F FIRG17 1 SAE	Female	800804012	19	1-5/16-12UN	G	153,5	6,04	F	93,2	3,67	C	45,0	1,77	I	47,8	1,88	E	48,0	1,89	0,77	1,69
	M FIRG 100 SAE	M FIRG17 1 SAE	Male	800804013						D	82,3	3,24	B	45,0	1,77	H	47,8	1,88	J	30,0	1,18	0,39	0,87
1"	F FIRG 114 SAE	F FIRG21 1-1/4 SAE	Female	800804014	25	1-5/8-12UN	G	172,8	6,80	F	106,0	4,17	C	55,0	2,17	I	59,8	2,35	E	55,0	2,17	1,22	2,68
	M FIRG 114 SAE	M FIRG21 1-1/4 SAE	Male	800804015						D	89,8	3,54	B	55,0	2,17	H	59,8	2,35	J	36,0	1,42	0,64	1,41
1-1/2"	F FIRG 112 SAE	F FIRG30 1-1/2 SAE	Female	800804016	38	1-7/8-12UN	G	214,9	8,46	F	132,4	5,21	C	65,0	2,56	I	72,0	2,83	E	80,0	3,15	2,82	6,22
	M FIRG 112 SAE	M FIRG30 1-1/2 SAE	Male	800804017						D	111,1	4,37	B	65,0	2,56	H	69,8	2,75	J	57,0	2,24	1,66	3,65
2"	F FIRG 200 SAE	F FIRG45 2 SAE	Female	800804018	51	2-1/2-12UN	G	241,5	9,51	F	156,6	6,17	C	80,0	3,15	I	88,5	3,48	E	100,0	3,94	5,10	11,24
	M FIRG 200 SAE	M FIRG45 2 SAE	Male	800804019						D	123,8	4,87	B	75,0	2,95	H	83,5	3,29	J	73,0	2,87	2,26	4,98

Panel mounting

FIRG Series is available upon request also as panel mounting version:

BC: Snap Ring Solution
Grooves on the male body and on the female sleeve.

BT: Lock Ring Solution
Thread on the male body and female body.

Using the BC and BT versions mounted on the panel, you obtain the breakaway function, avoiding damages of the hydraulic connections in case of strong axial force during unintended disconnection.

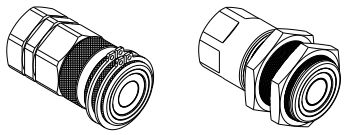

BC BT

SS version

For specific cases, FIRG Series is available upon request without the safety lock ball.

For additional information, please contact Stucchi Technical Support.

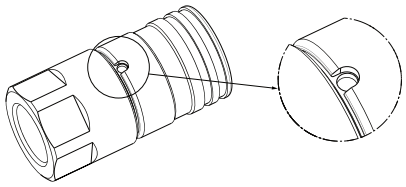

SPARE KIT SEAL FOR MALE

Repair kit / OR+BK			
Body Size	Description		Part Number
	OLD	NEW	
1/4”	M FIRG14	M FIRG7	815700519
3/8”	M FIRG38-12	M FIRG9	815700337
1/2”	M FIRG12A-34	M FIRG13	815700339
5/8”	M FIRG34B	M FIRG15	815700341
3/4”	M FIRG100-34A	M FIRG17	815700343
1”	M FIRG114	M FIRG21	815700345
1-1/2”	M FIRG112	M FIRG30	815700521
2”	M FIRG200	M FIRG45	815700796

O-Ring in Nitrile
BackUp in Teflon®

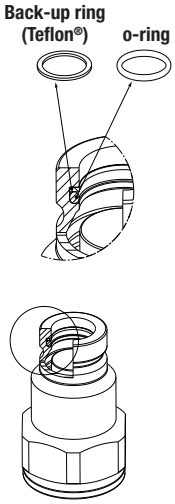

PROTECTIVE CAPS FOR FIRG SERIES

Protective caps are always recommended to protect the couplings from damage, dirt inclusion, and will increase the product life. This is particularly important in mobile applications where exposure to weather and aggregate materials are common.
For the FIRG series are available three kind of materials:

- plastic caps with lanyard (standard color: red, other colors available upon request)
- aluminum caps with lanyard (standard colors: natural aluminum, other colors available upon request)
- plastic caps, clip system (standard color: red, other colors available upon request)

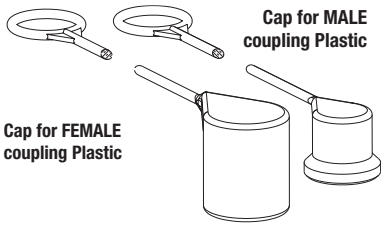

Protective Cap						
Body Size	Port Size	Description		Part number		Material/Color
		OLD	NEW	Cap for Female	Cap for Male	
1/4”	1/4”	FIRG14	FIRG7	815100000	815100023	Plastic/Red
3/8”	3/8”	FIRG38	FIRG9	815100002	815100025	Plastic/Red
3/8”	1/2”	FIRG12	FIRG9	815100002	815100027	Plastic/Red
1/2”	1/2”	FIRG12A	FIRG13	815100004	815100029	Plastic/Red
1/2”	3/4”	FIRG34	FIRG13	815100006	815100031	Plastic/Red
5/8”	3/4”	FIRG34B	FIRG15	815100008	815100011	Plastic/Red
3/4”	3/4”	FIRG34A	FIRG17	815100010	815100013	Plastic/Red
3/4”	1"	FIRG100	FIRG17	815100010	815100013	Plastic/Red
1”	1-1/4"	FIRG114	FIRG21	815100012	815100015	Plastic/Red

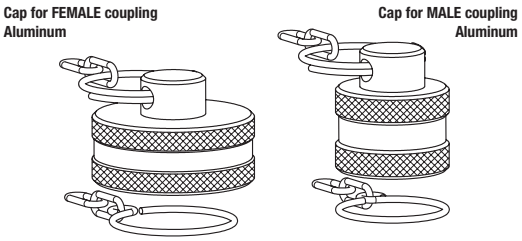

Protective Cap					
Body Size	Description		Part Number		Material/Color
	OLD	NEW	Cap for Female	Cap for Male	
1/4”	FIRG14	FIRG7	816005002	816005003	Aluminum/Natural
3/8”	FIRG38-12	FIRG9	816005004	816005005	Aluminum/Natural
1/2”	FIRG12A-34	FIRG13	816005006	816005007	Aluminum/Natural
5/8"	FIRG34B	FIRG15	816005008	816005009	Aluminum/Natural
3/4”	FIRG100-34A	FIRG17	816005010	816005011	Aluminum/Natural
1”	FIRG114	FIRG21	816005012	816005013	Aluminum/Natural
1-1/2”	FIRG112	FIRG30	815105014	815105017	Aluminum/Natural
2"	FIRG200	FIRG45	815105016	815105019	Aluminum/Natural

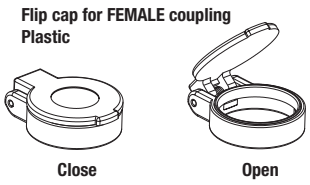

Protective Cap				
Body Size	Description		Part Number	Material/Color
	OLD	NEW	Cap for Female	
3/8”	FIRG38-12	FIRG9	815200002	Plastic/Red
1/2”	FIRG12A-34	FIRG13	815200004	Plastic/Red
5/8”	FIRG34B	FIRG15	815200006	Plastic/Red
3/4”	FIRG100-34A	FIRG17	815200008	Plastic/Red

STUCCHI Quick Couplings Catalog - December 2024 - All right reserved.
Texts, data and illustrations mentioned in this catalogue may be changed by Stucchi at any time, without notice; always refer to the version uploaded on the English version of stucchigroup.com/en website for the latest release. In case of doubt, please contact Stucchi technical service.


TEL : 71 468 021
TSM : 27 365 101
MED SERVICE GROUP
Maintenance Industrielle
et Location d'engins
2440
8t

A NEWSERIES

INTERCHANGE > **ISO 16028**

Stucchi®

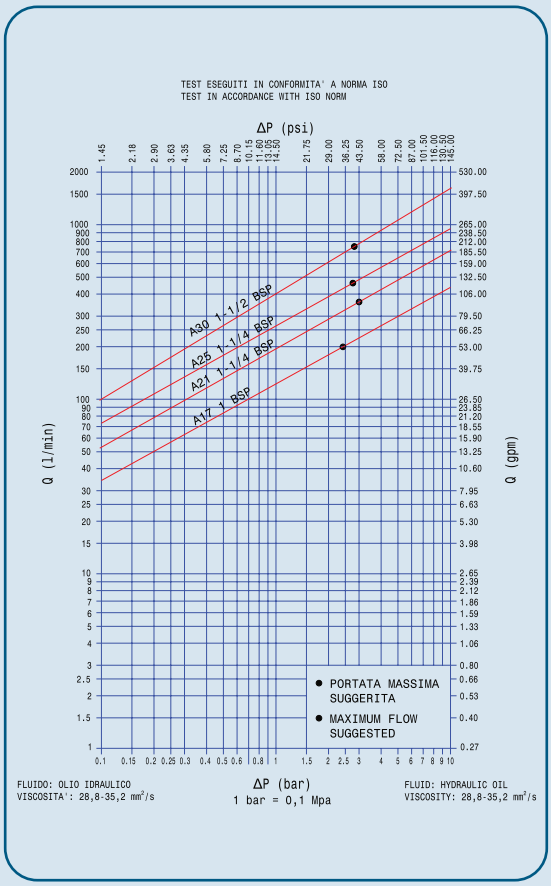

TECHNICAL FEATURES AND OPTIONS

Interchange
ISO 16028

Sealing description
Nitrile NBR

Connection system
Push

Available sizes
3/4", 1", 1-1/4", 1-1/2"

Material /treatment
Carbon steel (Zn-Ni version available)

Available threads
BSP - NPT - SAE METRIC

Operating pressure
Up to 350 bar

Locking mechanism
Locking ball + Safety Lock

Flow rate
Up to 750 l/min

Temperature (°C)
-20°C / +100°C

Valving style
Flat face

Connection under pressure
Connection: not allowed
Disconnection: not allowed

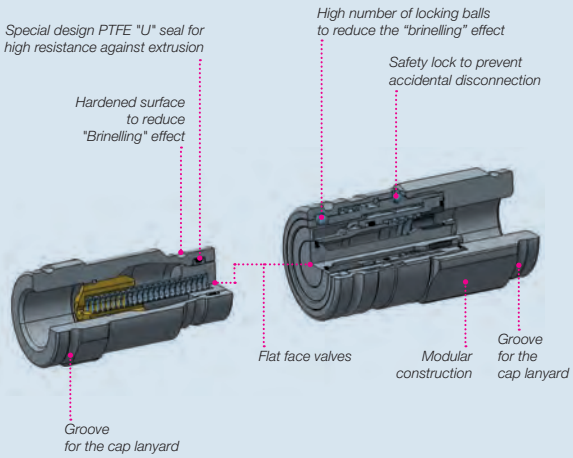

BENEFITS

- Flat face is easy to clean, reducing the inclusion of contamination inside the hydraulic circuit.
- Minimal fluid spillage during disconnection, reducing fluid spillage to the environment.
- Minimal air inclusion during connection.
- Internal valve design creates minimal pressure drop, maintaining circuit efficiency in the system.
- The modular design allows flexibility with a wide range of configurations.
- Good resistance to pressure impulses.
- Compact slim design.
- Safe and simple to use.

HOW TO USE

- Before to connect, clean the mating surface of the couplings to avoid dirt inclusion in the circuit.
- To connect push the male half towards the female half or vice versa.
- After connection turn the external sleeve to engage safety lock function, to prevent accidental disconnection.
- To disconnect turn the external sleeve until the sleeve lock notch match the safety lock ball and pull back the sleeve.

MAIN APPLICATIONS

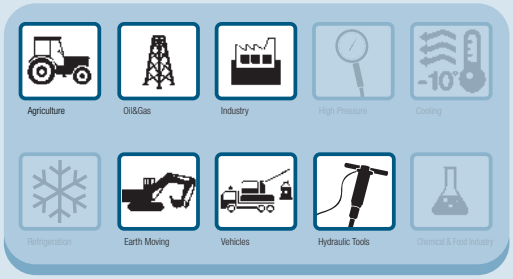

PERFORMANCES

Size	ISO Size	Series	Max. flow suggested Max. portata suggerita		Connect force		Disconnect force		Spillage*
Inch	mm (ISO)		l/min	GPM	N	lbf	N	lbf	ml
3/4	19,0	A17	200	53,00	220	49,50	70	15,75	0,03
1	25,0	A21	378	100,17	250	56,25	75	16,88	0,03
1-1/4	31,5	A25	450	119,25	350	78,75	90	20,25	0,05
1-1/2	38	A30	750	198,75	390	87,75	70	15,75	0,05

Size	Series	Max. operating pressure						Burst pressure					
		Coupled		Male		Female		Coupled		Male		Female	
Inch		MPa	psi	MPa	psi	MPa	psi	MPa	psi	MPa	psi	MPa	psi
3/4	A17	35	5075	35	5075	35	5075	105	15225	105	15225	105	15225
1	A21	35	5075	35	5075	30	4350	105	15225	105	15225	84	12180
1-1/4	A25	30	4350	30	4350	30	4350	90	13050	90	13050	84	12180
1-1/2	A30	27	3915	27	3915	27	3915	81	11745	81	11745	70	10150

* Spillage is an indicative value of the fluid loss during disconnection (according to ISO norm test method).

Different possible configurations:
Different threads available upon request.

Temperature range:
Standard seals NBR (Nitrile): from -20 °C to +100 °C (from -4 °F to +212 °F).
Upon request seals in FKM (VITON®): from -15°C to +180°C (from +5 °F to +356 °F).
Please read carefully Instructions and warnings for proper selection of the products.

Tests:
Qualification tests have been performed with hydraulic oil using couplings with NBR (Nitrile) seals.
The couplings coupled have been tested at max. operating pressure for 1.000.000 impulses according to ISO norm test method.
The male and female uncoupled has been tested for 100.000 impulses.

WARNING

A defect, a wrong choice or an improper use of products, can cause injury to persons, animals and objects.
Never connect or disconnect with dynamic pressure (e.g. pump on).
Do not use the female coupling disconnected with high impulse pressure.
Do not couple-uncouple with flow and/or pressure in the circuit.
Do not couple-uncouple when the temperature inside of the circuit is higher than 80 °C (176 °F).
Check the maximum allowable working pressure of the port in use.
Make sure that the medium used is compatible with seal and material as indicated for each series.
In case of doubt please contact Stucchi Technical Support.
The interchangeability is mentioned under the assumption that the manufacturer of the considered products has not changed any dimension.
It is mandatory to carefully read and closely follow the instructions before selecting or using any Stucchi products.
Always refer to the version uploaded in the Instructions and warning section of stucchigroup.com website for the latest release.
For specific, product-related, instructions, please contact Stucchi technical service.

A NEWSERIES

Stucchi®

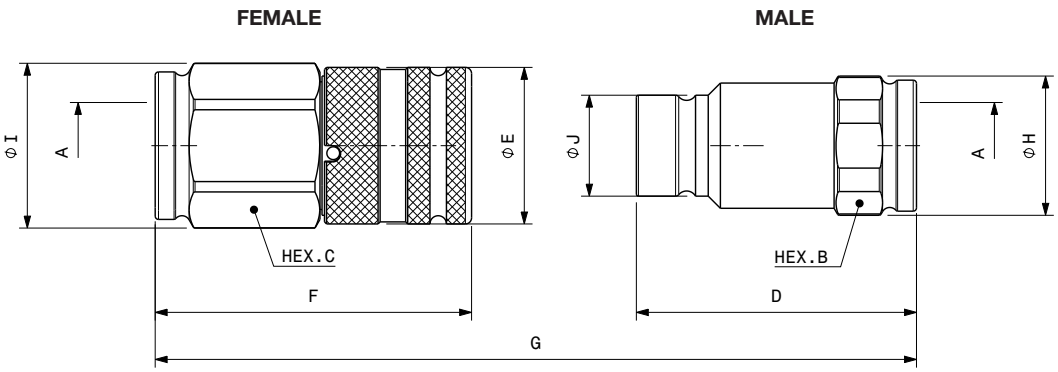

Port description: FEMALE THREAD BSPP (ISO 1179-1)

Body Size	Description Inch	Part Number		ISO DN	PORT (A)	Overall Length			Length			Wrench Flat			Diameter			Diameter			Weight	
							mm	in		mm	in		mm	in		mm	in		mm	in	Kg	lb
3/4"	F A17 3/4 BSP	Female	812500040	19	3/4"	G	157,1	6,19	F	96,8	3,81	C	46,0	1,81	I	49,8	1,96	E	48,0	1,89	0,97	2,14
	M A17 3/4 BSP	Male	812500041						D	82,3	3,24	B	41,0	1,61	H	44,8	1,76	J	30,0	1,18	0,53	1,17
3/4"	F A17 1 BSP	Female	812500006	19	1"	G	159,1	6,26	F	98,8	3,89	C	46,0	1,81	I	49,8	1,96	E	48,0	1,89	0,94	2,07
	M A17 1 BSP	Male	812500007						D	82,3	3,24	B	46,0	1,81	H	49,8	1,96	J	30,0	1,18	0,48	1,06
1"	F A21 3/4 BSP	Female	812500048	25	3/4"	G	176,6	6,95	F	102,8	4,05	C	55,0	2,17	I	59,8	2,35	E	55,0	2,17	1,44	3,17
	M A21 3/4 BSP	Male	812500049						D	96,8	3,81	B	55,0	2,17	H	59,8	2,35	J	36,0	1,42	0,97	2,14
1"	F A21 1 BSP	Female	812500050	25	1"	G	178,6	7,03	F	104,8	4,13	C	55,0	2,17	I	59,8	2,35	E	55,0	2,17	1,42	3,13
	M A21 1 BSP	Male	812500051						D	96,8	3,81	B	55,0	2,17	H	59,8	2,35	J	36,0	1,42	0,89	1,96
1"	F A21 1-1/4 BSP	Female	812500008	25	1-1/4"	G	172,6	6,80	F	105,8	4,17	C	55,0	2,17	I	59,8	2,35	E	55,0	2,17	1,35	2,98
	M A21 1-1/4 BSP	Male	812500009						D	89,8	3,54	B	55,0	2,17	H	59,8	2,35	J	36,0	1,42	0,64	1,40
1"	F A21 1-1/2 BSP	Female	812500046	25	1-1/2"	G	187,6	7,39	F	110,8	4,36	C	60,0	2,36	I	64,8	2,55	E	55,0	2,17	1,40	3,09
	M A21 1-1/2 BSP	Male	812500047						D	99,8	3,93	B	60,0	2,36	H	64,8	2,55	J	36,0	1,42	0,80	1,76
1-1/4"	F A25 1 BSP	Female	812500056	31,5	1"	G	196,7	7,74	F	120,0	4,72	C	55,0	2,17	I	65,0	2,56	E	65,0	2,56	2,09	4,61
	M A25 1 BSP	Male	812500057						D	100,0	3,94	B	55,0	2,17	H	49,8	1,96	J	44,0	1,73	1,13	2,49
1-1/4"	F A25 1-1/4 BSP	Female	812500014	31,5	1-1/4"	G	206,7	8,14	F	125,0	4,92	C	55,0	2,17	I	65,0	2,56	E	65,0	2,56	2,07	4,56
	M A25 1-1/4 BSP	Male	812500015						D	105,0	4,13	B	55,0	2,17	H	59,8	2,35	J	44,0	1,73	1,09	2,40
1-1/2"	F A30 1-1/4 BSP	Female	812500058	38	1-1/4"	G	214,8	8,46	F	132,3	5,21	C	65,0	2,56	I	82,0	3,23	E	80,0	3,15	3,25	7,17
	M A30 1-1/4 BSP	Male	812500059						D	111,1	4,37	B	65,0	2,56	H	69,8	2,75	J	57,0	2,24	1,75	3,86
1-1/2"	F A30 1-1/2 BSP	Female	812500016	38	1-1/2"	G	214,8	8,46	F	132,3	5,21	C	65,0	2,56	I	82,0	3,23	E	80,0	3,15	3,25	7,17
	M A30 1-1/2 BSP	Male	812500017						D	111,1	4,37	B	65,0	2,56	H	69,8	2,75	J	57,0	2,24	1,71	3,77
1-1/2"	F A30 2 BSP	Female	812500060	38	2"	G	228,3	8,99	F	137,9	5,43	C	75,0	2,95	I	82,0	3,23	E	80,0	3,15	3,33	7,34
	M A30 2 BSP	Male	812500061						D	119,0	4,69	B	75,0	2,95	H	82,0	3,23	J	57,0	2,24	1,93	4,25

Port description: FEMALE THREAD NPT (ANSI B1.20.1)

Body Size	Description Inch	Part Number		ISO DN	PORT (A)	Overall Length			Length			Wrench Flat			Diameter			Diameter			Weight	
							mm	in		mm	in		mm	in		mm	in		mm	in	Kg	lb
3/4"	F A17 3/4 NPT	Female	812501014	19	3/4"	G	156,1	6,15	F	95,8	3,77	C	46,0	1,81	I	49,8	1,96	E	48,0	1,89	0,97	2,14
	M A17 3/4 NPT	Male	812501015						D	82,3	3,24	B	41,0	1,61	H	44,8	1,76	J	30,0	1,18	0,53	1,17
3/4"	F A17 1 NPT	Female	812501012	19	1"	G	159,1	6,26	F	98,8	3,89	C	46,0	1,81	I	49,8	1,96	E	48,0	1,89	0,94	2,07
	M A17 1 NPT	Male	812501013						D	82,3	3,24	B	46,0	1,81	H	49,8	1,96	J	30,0	1,18	0,48	1,06
1"	F A21 1 NPT	Female	812501020	25	1"	G	178,6	7,03	F	104,8	4,13	C	55,0	2,17	I	59,5	2,34	E	55,0	2,17	1,45	3,20
	M A21 1 NPT	Male	812501021						D	96,8	3,81	B	55,0	2,17	H	59,5	2,35	J	36,0	1,42	0,89	1,96
1"	F A21 1-1/4 NPT	Female	812501016	25	1"	G	172,6	6,80	F	105,8	4,17	C	55,0	2,17	I	59,5	2,34	E	55,0	2,17	1,38	3,05
	M A21 1-1/4 NPT	Male	812501017						D	89,8	3,54	B	55,0	2,17	H	59,5	2,35	J	36,0	1,42	0,64	1,40
1"	F A21 1-1/2 NPT	Female	812501018	25	1-1/2"	G	187,6	7,39	F	110,8	4,36	C	60,0	2,36	I	64,8	2,55	E	55,0	2,17	1,49	3,28
	M A21 1-1/2 NPT	Male	812501019						D	99,8	3,93	B	60,0	2,36	H	64,8	2,55	J	36,0	1,42	0,80	1,76
1-1/4"	F A25 1 NPT	Female	812501056	31,5	1"	G	206,7	8,14	F	125,0	4,92	C	55,0	2,17	I	65,0	2,56	E	65,0	2,56	2,09	4,61
	M A25 1 NPT	Male	812501057						D	105,0	4,13	B	55,0	2,17	H	59,8	2,35	J	44,0	1,73	1,13	2,49
1-1/4"	F A25 1-1/4 NPT	Female	812501024	31,5	1-1/4"	G	206,7	8,14	F	125,0	4,92	C	55,0	2,17	I	65,0	2,56	E	65,0	2,56	2,09	4,61
	M A25 1-1/4 NPT	Male	812501025						D	105,0	4,13	B	55,0	2,17	H	59,8	2,35	J	44,0	1,73	1,13	2,49
1-1/2"	F A30 1-1/2 NPT	Female	812501026	38	1-1/2"	G	214,8	8,46	F	132,3	5,21	C	65,0	2,56	I	82,0	3,23	E	80,0	3,15	3,35	7,38
	M A30 1-1/2 NPT	Male	812501027						D	111,1	4,37	B	65,0	2,56	H	69,8	2,75	J	57,0	2,24	1,73	3,82
1-1/2"	F A30 2 NPT	Female	812501060	38	2"	G	228,3	8,99	F	137,9	5,43	C	82,0	3,23	I	80,0	3,15	E	80,0	3,15	3,05	6,72
	M A30 2 NPT	Male	812501061						D	119,0	4,69	B	75,0	2,95	H	82,0	3,23	J	57,0	2,24	2,02	4,45

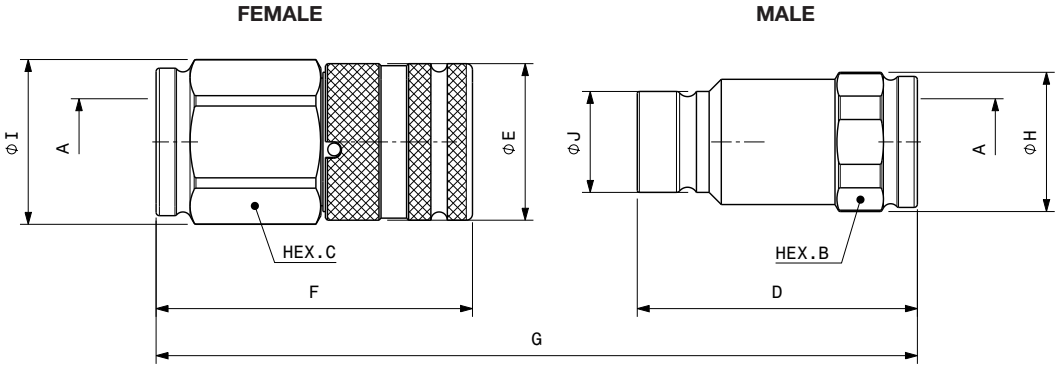

Port description: FEMALE THREAD SAE (ISO11926-1 & SAEJ1926-1)

Body Size	Description Inch	Part Number		ISO DN	PORT (A)	Overall Length			Length			Wrench Flat			Diameter			Diameter			Weight	
							mm	in		mm	in		mm	in		mm	in		mm	in	Kg	lb
3/4"	**F A17 3/4 SAE**	Female	**812504030**	19	1-1/16-12UN	G	159,1	6,26	F	98,8	3,89	C	46,0	1,81	I	49,8	1,96	E	48,0	1,89	0,94	2,07
	M A17 3/4 SAE	Male	**812504031**						D	82,3	3,24	B	41,0	1,61	H	44,8	1,76	J	30,0	1,18	0,48	1,06
3/4"	**F A17 1 SAE**	Female	**812504026**	19	1 - 5/16 -12UN	G	159,1	6,26	F	98,8	3,89	C	46,0	1,81	I	49,8	1,96	E	48,0	1,89	0,94	2,07
	M A17 1 SAE	Male	**812504027**						D	82,3	3,24	B	46,0	1,81	H	49,8	1,96	J	30,0	1,18	0,48	1,06
3/4"	**F A17 1-1/4 SAE**	Female	**812504028**	19	11 5/8 -12UN	G	169,1	6,66	F	103,3	4,07	C	55,0	2,17	I	59,8	2,35	E	48,0	1,89	2,09	4,61
	M A17 1-1/4 SAE	Male	**812504029**						D	87,8	3,46	B	55,0	2,17	H	59,8	2,35	J	30,0	1,18	1,13	2,49
1"	**F A21 1 SAE**	Female	**812504034**	21	1 - 5/16 -12UN	G	178,6	7,03	F	104,8	4,13	C	55,0	2,17	I	59,8	2,35	E	55,0	2,17	1,43	3,14
	M A21 1 SAE	Male	**812504035**						D	96,8	3,81	B	55,0	2,17	H	59,8	2,35	J	36,0	1,42	0,89	1,96
1"	**F A21 1-1/4 SAE**	Female	**812504032**	21	11 5/8 -12UN	G	172,6	6,80	F	105,8	4,17	C	55,0	2,17	I	59,5	2,34	E	55,0	2,17	1,35	2,97
	M A21 1-1/4 SAE	Male	**812504033**						D	89,8	3,54	B	55,0	2,17	H	59,5	2,35	J	36,0	1,42	0,64	1,40
1-1/4"	**F A25 1 SAE**	Female	**812504056**	31,5	1 - 5/16 -12UN	G	206,7	8,14	F	125,0	4,92	C	55,0	2,17	I	65,0	2,56	E	65,0	2,56	4,61	10,16
	M A25 1 SAE	Male	**812504057**						D	105,0	4,13	B	55,0	2,17	H	59,8	2,35	J	44,0	1,73	2,49	5,49
1-1/4"	**F A25 1-1/4 SAE**	Female	**812504058**	31,5	11 5/8 -12UN	G	206,7	8,14	F	125,0	4,92	C	55,0	2,17	I	65,0	2,56	E	65,0	2,56	4,61	10,16
	M A25 1-1/4 SAE	Male	**812504059**						D	105,0	4,13	B	55,0	2,17	H	59,8	2,35	J	44,0	1,73	2,49	5,49
1-1/2"	**F A30 1-1/2 SAE**	Female	**812504044**	38	1 - 7/8 -12UN	G	214,8	8,46	F	132,3	5,21	C	65,0	2,56	I	82,0	3,23	E	80,0	3,15	3,24	7,15
	M A30 1-1/2 SAE	Male	**812504045**						D	111,1	4,37	B	65,0	2,56	H	69,8	2,75	J	57,0	2,24	1,70	3,74

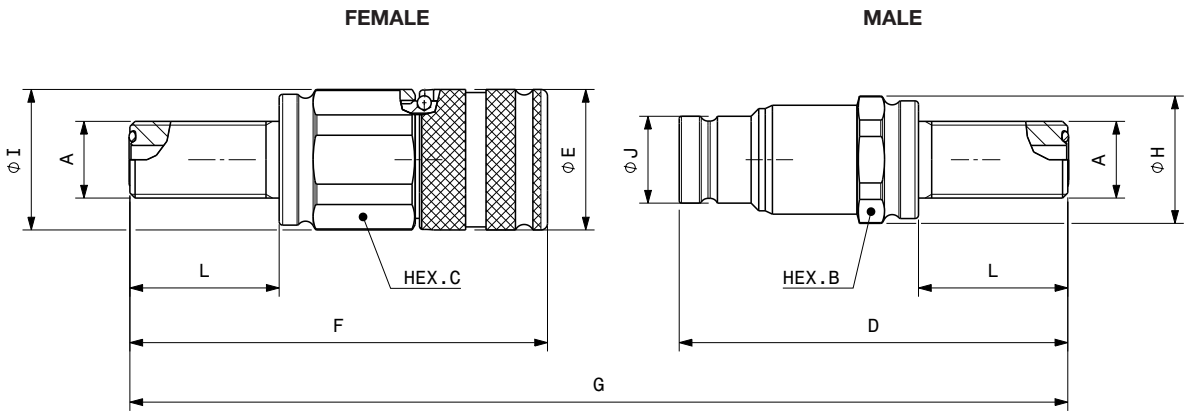

Port description: ORFS BULKEAD (ISO 8434-3 & SAE J1453)

Body Size	Description Inch	Part Number	ISO DN	PORT (A)	Overall Length mm	Overall Length in	Length mm	Length in	Wrench Flat mm	Wrench Flat in	Diameter mm	Diameter in	Diameter mm	Diameter in	Length mm	Length in	Weight Kg	Weight lb
3/4"	F A17 1 ORFS BH	Female 812513024	19	1-7/16-12UN	G 235,1	9,26	F 137,3	5,41	C 46,0	1,81	I 49,8	1,96	E 48,0	1,89	L 42,0	1,65	1,13	2,49
	M A17 1 ORFS BH	Male 812513025					D 119,8	4,72	B 46,0	1,81	H 49,8	1,96	J 30,0	1,18			0,66	1,46
1"	F A21 1-1/4 ORFS BH	Female 812513030	25	1-11/16-12UN	G 249,1	9,81	F 141,8	5,58	C 55,0	2,17	I 59,5	2,34	E 55,0	2,17	L 42,0	1,65	1,69	3,72
	M A21 1-1/4 ORFS BH	Male 812513031					D 130,3	5,13	B 55,0	2,17	H 59,5	2,35	J 36,0	1,42			0,96	2,11

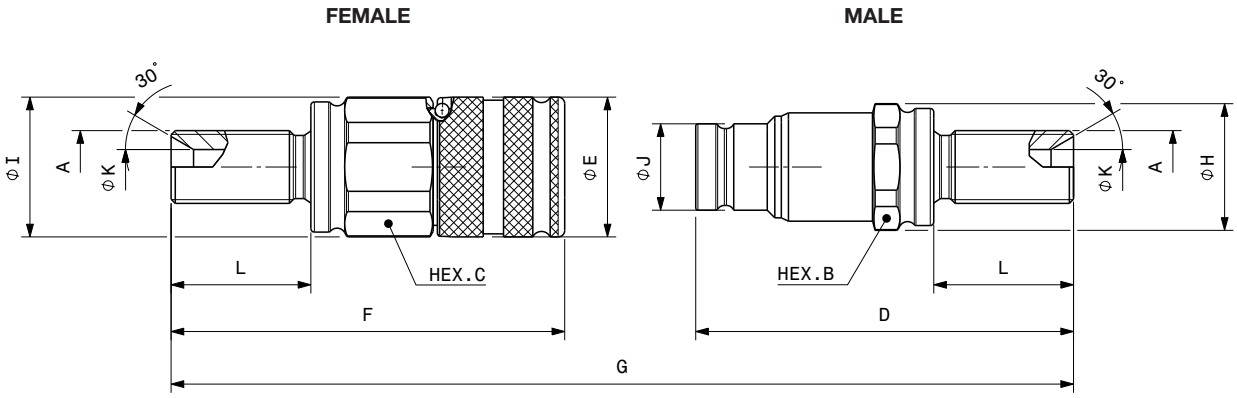

Port description: MALE THREAD BSPP BULKHEAD (ISO 8434-6)

Body Size	Description Inch	Part Number	ISO DN	PORT (A)	Overall Length mm	Overall Length in	Length mm	Length in	Wrench Flat mm	Wrench Flat in	Diameter mm	Diameter in	Diameter mm	Diameter in	Length mm	Length in	Weight Kg	Weight lb
3/4"	F A17 1 BSP BH41	Female 812500042	19	1"	G 232,3	9,15	F 136,3	5,37	C 46,0	1,81	I 49,8	1,96	E 48,0	1,89	L 41,0	1,61	1,13	2,49
	M A17 1 BSP BH41	Male 812500043					D 118,0	4,65	B 46,0	1,81	H 49,8	1,96	J 30,0	1,18			0,66	1,46

A NEWSERIES

Stucchi®

FEMALE

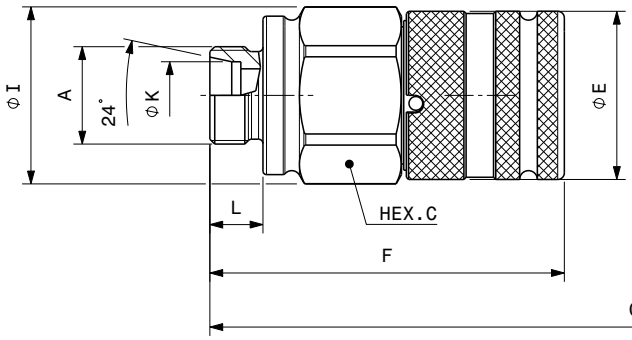

MALE

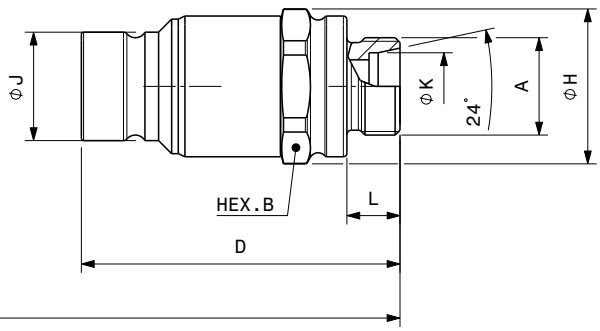

Port description: MALE THREAD L SERIES -24° CONE (ISO 8434-1 & DIN 2353)

Body Size	Description Inch	Part Number		ISO DN	PORT (A)	Overall Length			Length			Wrench Flat			Diameter			Diameter			Diameter			Length			Weight	
							mm	in		mm	in		mm	in		mm	in		mm	in		mm	in		mm	in	Kg	lbs
3/4"	F A17 L18	Female	812508024	19	M26x1.5	G	177,3	6,98	F	110,3	4,34	C	46,0	1.81	I	49,8	1,96	E	48,0	1,89	K	18	0,71	L	12,0	0,47	0,93	2,05
	M A17 L18	Male	812508025						D	89,0	3,50	B	46,0	1,81	H	49,8	1,96	J	30,0	1,18							0,51	1,12
3/4"	F A17 L22	Female	812508026	19	M30x2	G	178,4	7,02	F	109,3	4,30	C	46,0	1,81	I	49,8	1,96	E	48,0	1,89	K	22	0,87	L	14	0,55	0,91	2,01
	M A17 L22	Male	812508027						D	91,1	3,59	B	46,0	1,81	H	49,8	1,96	J	30,0	1,18							0,48	1,06

FEMALE

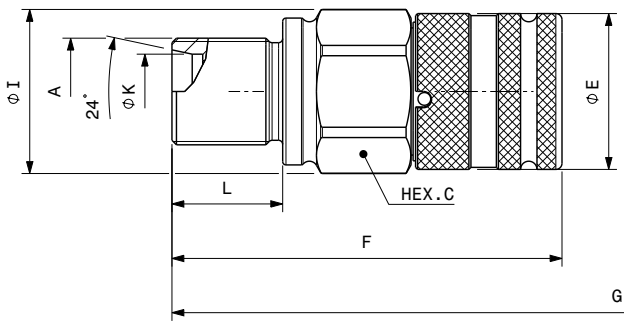

MALE

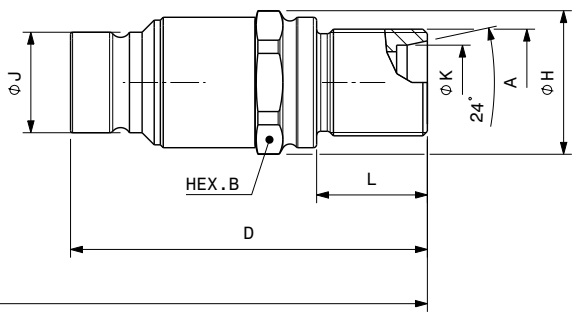

MALE THREAD L SERIES -24° CONE BULKHEAD (ISO 8434-1 & DIN 2353)

Body Size	Description Inch	Part Number		ISO DN	PORT (A)	Overall Length			Length			Wrench Flat			Diameter			Diameter			Diameter			Length			Weight	
							mm	in		mm	in		mm	in		mm	in		mm	in		mm	in		mm	in	Kg	lbs
3/4"	F A17 L18 SCHOTT	Female	812510024	19	M26x1.5	G	207,3	8,16	F	125,3	4,93	C	46,0	1,81	I	49,8	1,96	E	48,0	1,89	K	18	0,71	L	27,0	1,06	0,97	2,13
	M A17 L18 SCHOTT	Male	812510025						D	104,0	4,09	B	46,0	1,81	H	49,8	1,96	J	30,0	1,18							0,55	1,21
3/4"	F A17 L22 SCHOTT	Female	812510026	19	M30x2	G	218,3	8,59	F	129,3	5,09	C	46,0	1,81	I	49,8	1,96	E	48,0	1,89	K	22	0,87	L	34,0	1,34	0,97	2,13
	M A17 L22 SCHOTT	Male	812510027						D	111,0	4,37	B	46,0	1,81	H	49,8	1,96	J	30,0	1,18							0,55	1,21
1"	F A21 L22 SCHOTT	Female	812510028	25	M30x2	G	232,4	9,15	F	133,8	5,27	C	55,0	2,17	I	59,5	2,34	E	55,0	2,17	K	22	0,87	L	34,0	1,34	1,55	3,42
	M A21 L22 SCHOTT	Male	812510029						D	121,6	4,79	B	55,0	2,17	H	59,8	2,35	J	36,0	1,42							0,87	1,91
1"	F A21 L28 SCHOTT	Female	812510030	25	M36X2	G	232,4	9,15	F	133,8	5,27	C	55,0	2,17	I	55,0	2,17	E	55,0	2,17	K	28	1,10	L	34,0	1,34	1,60	3.51
	M A21 L28 SCHOTT	Male	812510031						D	121,6	4,79	B	55,0	2,17	H	55,0	2,17	J	36,0	1,42							0,94	2,06

A NEWSERIES

Stucchi®

Zinc Nickel version

A Series is available upon request also in Zinc Nickel version.

The Zinc Nickel plating ensures high resistance to corrosion and it is ideal for hydraulic equipment applications where an improved corrosion resistance is necessary.

For specific codes, configuration or any other information, please contact Stucchi Technical Support.

Panel mounting

A Series is available upon request also as panel mounting version.

BC: Snap Ring Solution
Grooves on the male body and on the female sleeve.

BR: Snap Ring Solution
Grooves on the male adaptor and on the female adaptor.

BT: Lock Ring Solution
Thread on the male body and female body.

For specific codes, dimensions or any other information, please contact Stucchi Technical Support.

Using the BC and BT versions mounted on the panel, you obtain the breakaway function, avoiding damages of the hydraulic connections in case of strong axial force during unintended disconnection.

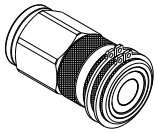

BC

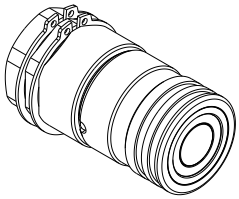

BR

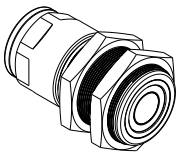

BT

SS version

For specific cases, A Series is available upon request without the safety lock ball.

For additional information, please contact Stucchi Technical Support.

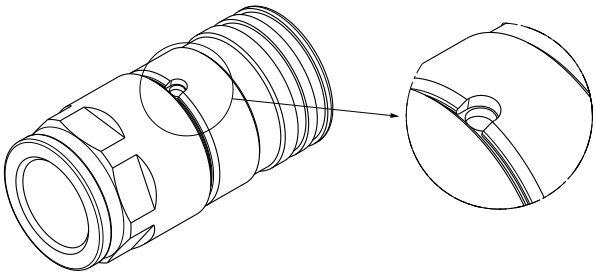

A NEWSERIES

SPARE KIT SEAL FOR MALE

Repair kit / OR+BK		
Body Size	Description	Part Number
3/4”	M A17	815700343
1”	M A21	815700345
1-1/4”	M A25	815700693
1-1/2"	M A30	815700521

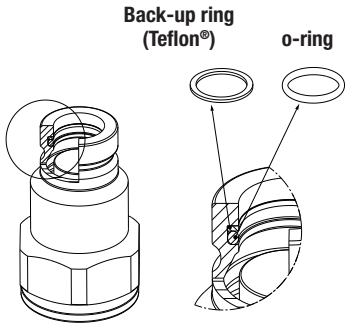

O-Ring in Nitrile
BackUp in Teflon®

PROTECTIVE CAPS FOR A SERIES

Protective caps are always recommended to protect the couplings from damage, dirt inclusion, and will increase the product life. This is particularly important in mobile applications where exposure to weather and aggregate materials are common.
For the A series are available three kind of materials:

- plastic caps complete with lanyard (standard color: red, other colors available upon request)
- aluminum caps complete with lanyard (standard colors: natural aluminum, other colors available upon request)

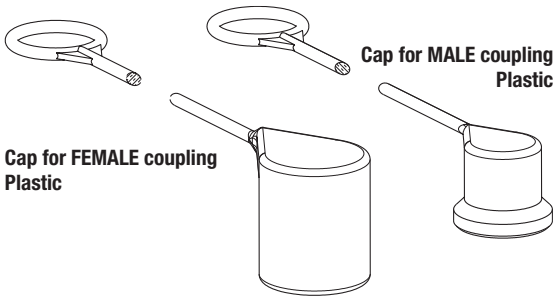

Protective Cap					
Body Size	Port size	Description	Part number		Material/Color
			Cap for Female	Cap for Male	
3/4"	3/4"	A17	815100010	815100013	Plastic/Red
3/4"	1"	A17	815100010	815100013	Plastic/Red
1"	3/4"	A21	815100012	815100015	Plastic/Red
1"	1"	A21	815100012	815100015	Plastic/Red
1"	1-1/4"	A21	815100012	815100015	Plastic/Red

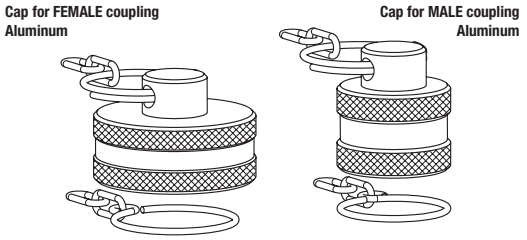

Protective Cap				
Body Size	Description	Part number		Material/Color
		Cap for Female	Cap for Male	
3/4"	A17	816005010	816005011	Aluminium/Natural
1"	A21	816005012	816005013	Aluminium/Natural
1-1/4"	A25	815205020	815205021	Aluminium/Natural
1-1/2"	A30	815105014	815105017	Aluminium/Natural

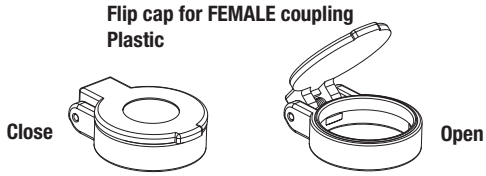

Protective Cap			
Body Size	Description	Part number	Material/Color
		Cap for Female	
3/4"	F A17	815200008	Plastic/Red

STUCCHI Quick Couplings Catalog - December 2024 - All right reserved.
Texts, data and illustrations mentioned in this catalogue may be changed by Stucchi at any time, without notice; always refer to the version uploaded on the English version of stucchigroup.com/en website for the latest release. In case of doubt, please contact Stucchi technical service.

ASERIES

INTERCHANGE > **ISO 16028 - NFPA T3.20.15 - HTMA (size 3/8")**

Stucchi®

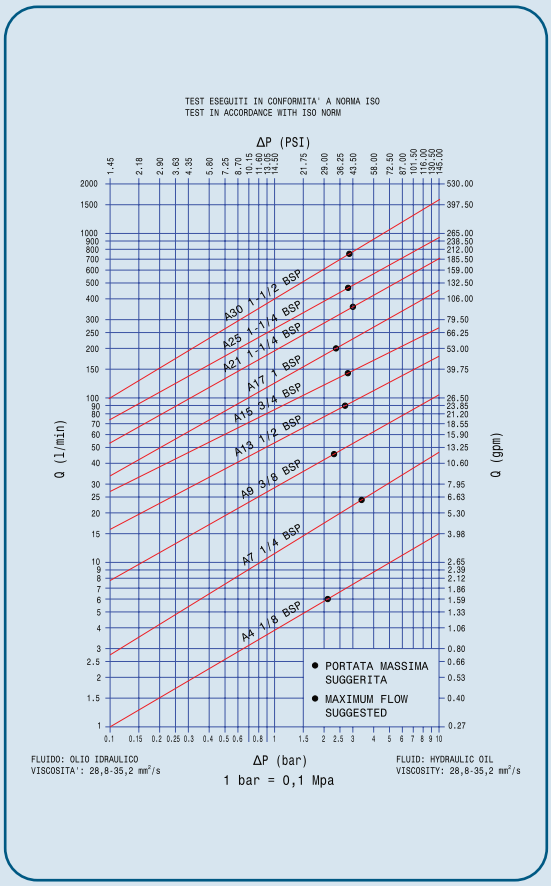

TECHNICAL FEATURES AND OPTIONS

Interchange
ISO 16028
NFPA T3.20.15
HTMA (size 3/8")

Sealing description
Nitrile NBR

Connection system
Push

Available sizes
from 1/8"
to 1-1/2"

Material /treatment
Carbon steel/
Cr3 (Zn-Ni version available)

Available threads
BSP - NPT - SAE
ORFS - METRIC - JIC

Operating pressure
Up to 420 bar

Locking mechanism
Locking ball +
Safety Lock

Flow rate
Up to 750 l/min

Temperature (°C)
-20°C / +100°C

Valving style
Flat face

Connection under pressure
Connection: not allowed
Disconnection: not allowed

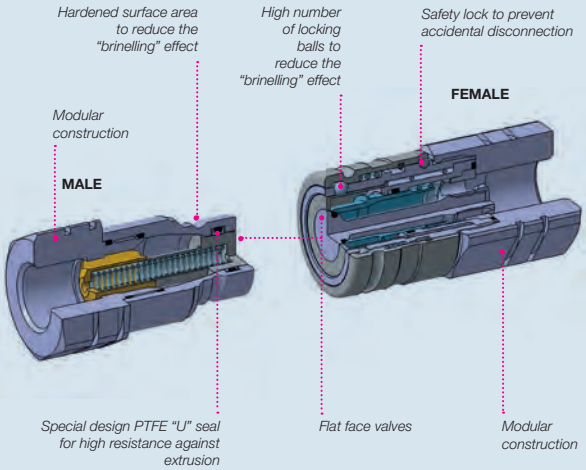

BENEFITS

- Flat face is easy to clean, reducing the inclusion of contamination inside the hydraulic circuit.
- Minimal fluid spillage during disconnection, reducing fluid spillage to the environment.
- Minimal air inclusion during connection.
- Internal valve design creates minimal pressure drop, maintaining circuit efficiency in the system
- The modular design allows flexibility with a wide range of configurations.
- Good resistance to pressure impulses.
- Compact slim design.
- Safe and simple to use.

HOW TO USE

- Before to connect, clean the mating surface of the couplings to avoid dirt inclusion in the circuit.
- To connect push the male half towards the female half or vice versa.
- After connection turn the external sleeve to engage safety lock function, to prevent accidental disconnection.
- To disconnect turn the external sleeve until the sleeve lock notch match the safety lock ball and push back the sleeve.

MAIN APPLICATIONS

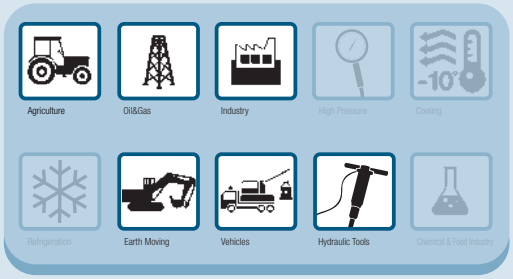

Stucchi®

PERFORMANCES

Size		Series/Size	Max. flow suggested		Connect force		Disconnect force		Spillage*
in	mm (ISO)		l/min	gpm	N	lbf	N	lbf	ml
1/8	-	A4	6	1,59	120	27,00	25	5,63	-
1/4	6,3	A7	24	6,36	150	33,75	45	10,13	0,01
3/8	10,0	A9	46	12,19	170	38,25	40	9,00	0,01
1/2	12,5	A13	90	23,85	190	42,75	50	11,25	0,02
5/8	16,0	A15	148	39,22	190	42,75	55	12,38	0,02
3/4	19,0	A17	200	53,00	220	49,50	70	15,75	0,03
1	25,0	A21	378	100,17	250	56,25	75	16,88	0,03
1-1/4	31,5	A25	450	119,25	350	78,75	90	20,25	0,05
1-1/2	38,0	A30	750	198,75	390	87,75	70	15,75	0,05

Size	Series/Size	Max. operating pressure						Burst pressure					
		Coupled		Male		Female		Coupled		Male		Female	
in		MPa	psi	MPa	psi	MPa	psi	MPa	psi	MPa	psi	MPa	psi
1/8	A4	42	6090	42	6090	42	6090	126	18270	126	18270	126	18270
1/4	A7	42	6090	42	6090	42	6090	126	18270	126	18270	126	18270
3/8	A9	35	5075	35	5075	35	5075	100	14500	100	14500	100	14500
1/2	A13	33	4785	33	4785	33	4785	100	14500	100	14500	100	14500
5/8	A15	33	4785	33	4785	33	4785	100	14500	100	14500	100	14500
3/4	A17	33	4785	33	4785	33	4785	100	14500	100	14500	100	14500
1	A21	30	4350	30	4350	30	4350	80	11600	80	11600	80	11600
1-1/4	A25	30	4350	30	4350	30	4350	80	11600	80	11600	80	11600
1-1/2	A30	27	3915	27	3915	27	3915	80	11600	80	11600	70	10150

* Spillage is an indicative value of the fluid loss during disconnection (according to ISO norm test method).

Different possible configurations:
Different threads available upon request.

Temperature range:
Standard seals NBR (Nitrile): from -20 °C to +100 °C (from -4 °F to +212 °F).
Upon request seals in FKM (VITON®): from -15°C to +180°C (from +5 °F to +356 °F).
Please read carefully Instructions and warnings for proper selection of the products.

Tests:
Qualification tests have been performed with hydraulic oil using couplings with NBR (Nitrile) seals.
The max. operating pressure have been verified for 100.000 impulses according to ISO norm test method.

WARNING

A defect, a wrong choice or an improper use of products, can cause injury to persons, animals and objects.
Never connect or disconnect with dynamic pressure (e.g. pump on).
Do not use the female coupling disconnected with high impulse pressure.
Do not couple-uncouple with flow and/or pressure in the circuit.
Do not couple-uncouple when the temperature inside of the circuit is higher than 80 °C (176 °F).
Check the maximum allowable working pressure of the port in use.
Make sure that the medium used is compatible with seal and material as indicated for each series.
In case of doubt please contact Stucchi Technical Support.
The interchangeability is mentioned under the assumption that the manufacturer of the considered products has not changed any dimension.
It is mandatory to carefully read and closely follow the instructions before selecting or using any Stucchi products.
Always refer to the version uploaded in the Instructions and warning section of stucchigroup.com website for the latest release.
For specific, product-related, instructions, please contact Stucchi technical service.

Stucchi®

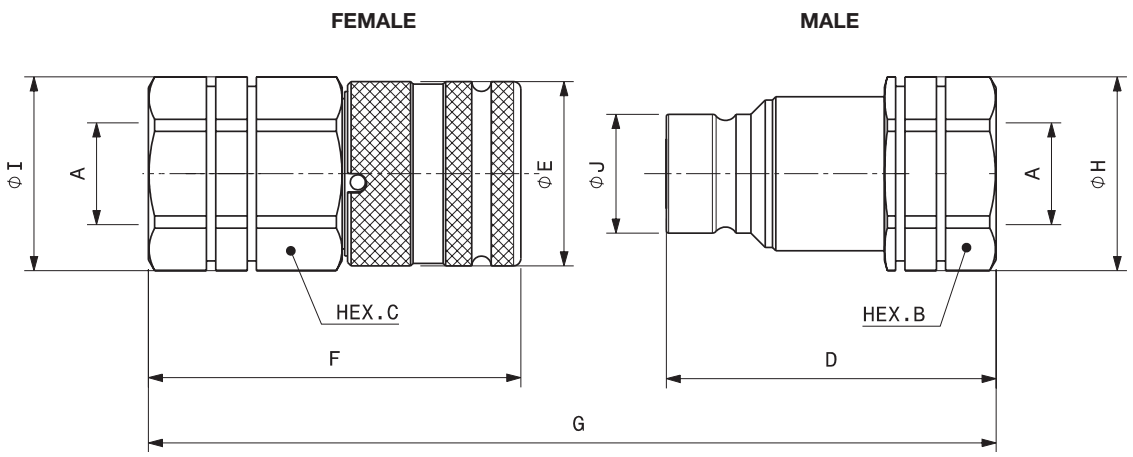

Port description: FEMALE THREAD BSPP (ISO 1179-1)

BODY SIZE	Descriptive Code	Item Code		A NEW	ISO DN	PORT (A)	Overall Length			Length			Hex			Diameter			Diameter			Weight	
								mm	in		mm	in		mm	in		mm	in		mm	in	kg	lb
1/8"	F A4 1/8 BSP	Female	801300002		-	1/8"	G	68,4	2,69	F	40,0	1,57	C	19,0	0,75	I	20,5	0,81	E	20,0	0,79	0,07	0,16
	M A4 1/8 BSP	Male	801300003							D	36,3	1,43	B	17,0	0,67	H	18,5	0,73	J	11,6	0,46	0,04	0,08
1/4"	F A7 1/4 BSP	Female	801300004		6,3	1/4"	G	90,2	3,55	F	53,1	2,09	C	27,0	1,06	I	29,0	1,14	E	28,0	1,10	0,19	0,41
	M A7 1/4 BSP	Male	801300031							D	47,9	1,89	B	22,0	0,87	H	23,8	0,94	J	16,1	0,63	0,09	0,19
3/8"	F A9 3/8 BSP	Female	801300006		10	3/8"	G	108,8	4,28	F	64,8	2,55	C	30,0	1,18	I	32,0	1,26	E	32,0	1,26	0,27	0,60
	M A9 3/8 BSP	Male	801300005							D	60,0	2,36	B	27,0	1,06	H	29,0	1,14	J	19,7	0,78	0,15	0,32
3/8"	F A9 1/2 BSP	Female	801300008		10	1/2"	G	116,3	4,58	F	69,8	2,75	C	30,0	1,18	I	32,0	1,26	E	32,0	1,26	0,28	0,61
	M A9 1/2 BSP	Male	801300007							D	62,5	2,46	B	27,0	1,06	H	29,0	1,14	J	19,7	0,78	0,14	0,30
1/2"	F A13 1/2 BSP	Female	801300014		12,5	1/2"	G	127,5	5,02	F	76,8	3,02	C	36,0	1,42	I	40,0	1,57	E	38,0	1,50	0,45	1,00
	M A13 1/2 BSP	Male	801300013							D	68,0	2,68	B	36,0	1,42	H	40,0	1,57	J	24,5	0,96	0,24	0,52
1/2"	F A13 3/4 BSP	Female	801300016		12,5	3/4"	G	137,0	5,39	F	83,8	3,30	C	36,0	1,42	I	40,0	1,57	E	38,0	1,50	0,46	1,02
	M A13 3/4 BSP	Male	801300015							D	70,5	2,78	B	36,0	1,42	H	40,0	1,57	J	24,5	0,96	0,27	0,60
5/8"	F A15 3/4 BSP	Female	801300022		16	3/4"	G	139,4	5,49	F	84,0	3,31	C	41,0	1,61	I	44,8	1,76	E	42,0	1,65	0,63	1,38
	M A15 3/4 BSP	Male	801300021							D	73,0	2,87	B	36,0	1,42	H	38,5	1,52	J	27,0	1,06	0,30	0,66
5/8"	F A15 1 BSP	Female	801300034		16	1"	G	145,4	5,72	F	87,0	3,43	C	41,0	1,61	I	44,8	1,76	E	42,0	1,65	0,60	1,32
	M A15 1 BSP	Male	801300035							D	76,0	2,99	B	41,0	1,61	H	44,8	1,76	J	27,0	1,06	0,33	0,73
3/4"	F A17 3/4 BSP	Female	801300040	812500040	19	3/4"	G	158,5	6,24	F	96,8	3,81	C	46,0	1,81	I	49,8	1,96	E	48,0	1,89	0,97	2,14
	M A17 3/4 BSP	Male	801300041	812500041						D	83,7	3,30	B	46,0	1,81	H	49,8	1,96	J	30,0	1,18	0,53	1,16
3/4"	F A17 1 BSP	Female	801300000	812500006	19	1"	G	160,5	6,32	F	98,8	3,89	C	46,0	1,81	I	49,8	1,96	E	48,0	1,89	0,94	2,07
	M A17 1 BSP	Male	801300001	812500007						D	83,7	3,30	B	46,0	1,81	H	49,8	1,96	J	30,0	1,18	0,48	1,05
1"	F A21 3/4 BSP	Female	801300048	812500048	25	3/4"	G	178,0	7,01	F	102,8	4,05	C	55,0	2,17	I	59,8	2,35	E	55,0	2,17	1,44	3,16
	M A21 3/4 BSP	Male	801300049	812500049						D	98,2	3,87	B	55,0	2,17	H	59,8	2,35	J	36,0	1,42	0,97	2,14
1"	F A21 1 BSP	Female	801300050	812500050	25	1"	G	178,6	7,03	F	104,8	4,13	C	55,0	2,17	I	59,8	2,35	E	55,0	2,17	1,42	3,12
	M A21 1 BSP	Male	801300051	812500051						D	96,8	3,81	B	55,0	2,17	H	59,8	2,35	J	36,0	1,42	0,89	1,96
1"	F A21 1-1/4 BSP	Female	801300024	812500008	25	1 1/4"	G	172,8	6,80	F	105,8	4,17	C	55,0	2,17	I	59,8	2,35	E	55,0	2,17	1,31	2,89
	M A21 1-1/4 BSP	Male	801300023	812500009						D	90,0	3,54	B	55,0	2,17	H	59,8	2,35	J	36,0	1,42	0,71	1,56
1"	F A21 1-1/2 BSP	Female	801300028	812500046	25	1 1/2"	G	182,8	7,20	F	110,8	4,36	C	60,0	2,36	I	64,8	2,55	E	55,0	2,17	1,40	3,08
	M A21 1-1/2 BSP	Male	801300027	812500047						D	95,0	3,74	B	60,0	2,36	H	64,8	2,55	J	36,0	1,42	0,80	1,76
1-1/4"	F A25 1 BSP	Female	801300046	812500056	31,5	1"	G	196,8	7,75	F	120,1	4,73	C	55,0	2,17	I	65,0	2,56	E	65,0	2,56	2,09	4,61
	M A25 1 BSP	Male	801300047	812500057						D	100,0	3,94	B	55,0	2,17	H	59,8	2,35	J	44,0	1,73	1,13	2,49
1-1/4"	F A25 1-1/4 BSP	Female	801300052	812500014	31,5	1 1/4"	G	206,8	8,14	F	125,1	4,93	C	55,0	2,17	I	65,0	2,56	E	65,0	2,56	2,07	4,56
	M A25 1-1/4 BSP	Male	801300053	812500015						D	105,0	4,13	B	55,0	2,17	H	59,8	2,35	J	44,0	1,73	1,09	2,39
1-1/2"	F A30 1-1/4 BSP	Female	801300036*	812500058	38	1-1/4"	G	214,9	8,46	F	132,4	5,21	C	65,0	2,56	I	69,8	2,75	E	80,0	3,15	3,25	7,16
	M A30 1-1/4 BSP	Male	801300037*	812500059						D	111,1	4,37	B	65,0	2,56	H	82,0	3,23	J	57,0	2,24	1,75	3,85
1-1/2"	F A30 1-1/2 BSP	Female	801300026	812500016	38	1 1/2"	G	214,9	8,46	F	132,4	5,21	C	65,0	2,56	I	82,0	3,23	E	80,0	3,15	3,14	6,92
	M A30 1-1/2 BSP	Male	801300025	812500017						D	111,1	4,37	B	65,0	2,56	H	69,8	2,75	J	57,0	2,24	1,67	3,67
1-1/2"	F A30 2 BSP	Female	801300038	812500060	38	2"	G	228,4	8,99	F	138,0	5,43	C	75,0	2,95	I	82,0	3,23	E	80,0	3,15	3,33	7,33
	M A30 2 BSP	Male	801300039	812500061						D	119,0	4,69	B	75,0	2,95	H	82,0	3,23	J	57,0	2,24	1,93	4,25

* Available upon request.

Part numbers highlighted in grey are phasing out and will be replaced by A NEW items.

Stucchi®

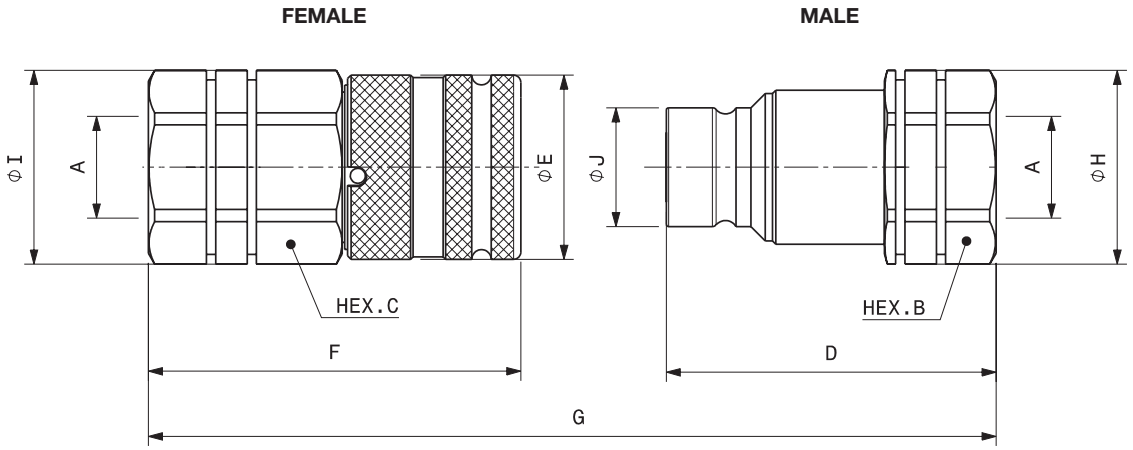

Port description: FEMALE THREAD NPT (ANSI B1.20.1)

BODY SIZE	Descriptive Code	Item Code	A NEW	ISO DN	PORT (A)	Overall Length			Length			Hex			Diameter			Diameter			Weight	
							mm	in		mm	in		mm	in		mm	in		mm	in	kg	lb
1/8"	F A4 1/8 NPT	Female 801301002			1/8"	G	68,4	2,69	F	40,0	1,57	C	19,0	0,75	I	20,5	0,81	E	20,0	0,79	0,07	0,16
	M A4 1/8 NPT	Male 801301003							D	36,3	1,43	B	17,0	0,67	H	18,5	0,73	J	11,6	0,46	0,04	0,08
1/4"	F A7 1/4 NPT	Female 801301004		6,3	1/4"	G	90,2	3,55	F	53,1	2,09	C	27,0	1,06	I	29,0	1,14	E	28,0	1,10	0,19	0,41
	M A7 1/4 NPT	Male 801301023							D	47,9	1,89	B	22,0	0,87	H	23,8	0,94	J	16,1	0,63	0,09	0,19
3/8"	F A9 3/8 NPT	Female 801301006		10	3/8"	G	108,8	4,28	F	64,8	2,55	C	30,0	1,18	I	32,0	1,26	E	32,0	1,26	0,27	0,60
	M A9 3/8 NPT	Male 801301005							D	60,0	2,36	B	27,0	1,06	H	29,0	1,14	J	19,7	0,78	0,15	0,33
3/8"	F A9 1/2 NPT	Female 801301008		10	1/2"	G	116,3	4,58	F	69,8	2,75	C	30,0	1,18	I	32,0	1,26	E	32,0	1,26	0,28	0,61
	M A9 1/2 NPT	Male 801301007							D	62,5	2,46	B	27,0	1,06	H	29,0	1,14	J	19,7	0,78	0,14	0,30
1/2"	F A13 1/2 NPT	Female 801301010		12,5	1/2"	G	127,5	5,02	F	76,8	3,02	C	36,0	1,42	I	40,0	1,57	E	38,0	1,50	0,45	1,00
	M A13 1/2 NPT	Male 801301009							D	68,0	2,68	B	36,0	1,42	H	40,0	1,57	J	24,5	0,96	0,30	1,65
1/2"	F A13 3/4 NPT	Female 801301012		12,5	3/4"	G	137,0	5,39	F	83,8	3,30	C	36,0	1,42	I	40,0	1,57	E	38,0	1,50	0,47	1,03
	M A13 3/4 NPT	Male 801301011							D	70,5	2,78	B	36,0	1,42	H	40,0	1,57	J	24,5	0,96	0,27	0,60
5/8"	F A15 3/4 NPT	Female 801301014		16	3/4"	G	139,4	5,49	F	84,0	3,31	C	41,0	1,61	I	44,8	1,76	E	42,0	1,65	0,63	1,39
	M A15 3/4 NPT	Male 801301013							D	73,0	2,87	B	36,0	1,42	H	38,5	1,52	J	27,0	1,06	0,29	0,64
5/8"	F A15 1 NPT	Female 801301020		16	1"	G	145,4	5,72	F	87,0	3,43	C	41,0	1,61	I	44,8	1,76	E	42,0	1,65	0,61	1,33
	M A15 1 NPT	Male 801301019							D	76,0	2,99	B	41,0	1,61	H	44,8	1,76	J	27,0	1,06	0,34	0,74
3/4"	F A17 3/4 NPT	Female 801301030	812501014	19	3/4"	G	157,5	6,20	F	95,8	3,77	C	46,0	1,81	I	49,8	1,96	E	48,0	1,89	0,96	2,12
	M A17 3/4 NPT	Male 801301031	812501015						D	83,7	3,30	B	46,0	1,81	H	49,8	1,96	J	30,0	1,18	0,54	1,18
3/4"	F A17 1 NPT	Female 801301000	812501012	19	1"	G	160,5	6,32	F	98,8	3,89	C	46,0	1,81	I	49,8	1,96	E	48,0	1,89	0,93	2,05
	M A17 1 NPT	Male 801301001	812501013						D	83,7	3,30	B	46,0	1,81	H	49,8	1,96	J	30,0	1,18	0,47	1,04
1"	F A21 1 NPT	Female 801301028	812501020	25	1"	G	178,6	7,03	F	104,8	4,13	C	55,0	2,17	I	59,8	2,35	E	55,0	2,17	1,43	3,15
	M A21 1 NPT	Male 801301029	812501021						D	96,8	3,81	B	55,0	2,17	H	59,8	2,35	J	36,0	1,42	0,90	1,98
1"	F A21 1-1/4 NPT	Female 801301016	812501016	25	1-1/4"	G	172,8	6,80	F	105,8	4,17	C	55,0	2,17	I	59,8	2,35	E	55,0	2,17	1,31	2,89
	M A21 1-1/4 NPT	Male 801301015	812501017						D	90,0	3,54	B	55,0	2,17	H	59,8	2,35	J	36,0	1,42	0,70	1,54
1"	F A21 1-1/2 NPT	Female 801301026 *	812501018	25	1-1/2"	G	182,8	7,20	F	110,8	4,36	C	60,0	2,36	I	64,8	2,55	E	55,0	2,17	1,37	3,01
	M A21 1-1/2 NPT	Male 801301027 *	812501019						D	95,0	3,74	B	60,0	2,36	H	64,8	2,55	J	36,0	1,42	0,75	1,66
1-1/4"	F A25 1 NPT	Female 801301032 *	812501056	31,5	1"	G	206,8	8,14	F	125,1	4,93	C	55,0	2,17	I	65,0	2,56	E	65,0	2,56	2,09	4,61
	M A25 1 NPT	Male 801301033 *	812501057						D	105,0	4,13	B	55,0	2,17	H	59,8	2,35	J	44,0	1,73	1,13	2,49
1-1/4"	F A25 1-1/4 NPT	Female 801301034	812501024	31,5	1-1/4"	G	206,8	8,14	F	125,1	4,93	C	55,0	2,17	I	65,0	2,56	E	65,0	2,56	2,10	4,63
	M A25 1-1/4 NPT	Male 801301035	812501025						D	105,0	4,13	B	55,0	2,17	H	59,8	2,35	J	44,0	1,73	1,11	2,44
1-1/2"	F A30 1-1/2 NPT	Female 801301018	812501026	38	1-1/2"	G	214,9	8,46	F	132,4	5,21	C	65,0	2,56	I	82,0	3,23	E	80,0	3,15	3,14	6,92
	M A30 1-1/2 NPT	Male 801301017	812501027						D	111,1	4,37	B	65,0	2,56	H	69,8	2,75	J	57,0	2,24	1,67	3,67
1-1/2"	F A30 2 NPT	Female 801301024	812501060	38	2"	G	228,4	8,99	F	138,0	5,43	C	75,0	2,95	I	82,0	3,23	E	80,0	3,15	3,25	7,17
	M A30 2 NPT	Male 801301025	812501061						D	119,0	4,69	B	75,0	2,95	H	82,0	3,23	J	57,0	2,24	1,94	4,28

* Available upon request.

Part numbers highlighted in grey are phasing out and will be replaced by A NEW items.

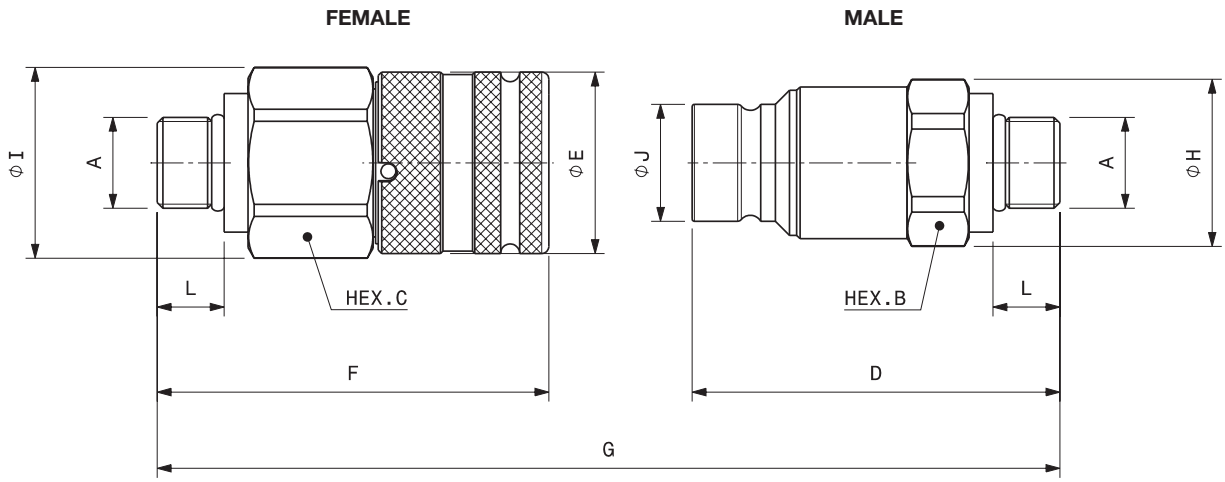

Port description: MALE THREAD SAE – (ISO 11926-3 & SAE J514)

BODY SIZE	Descriptive Code	Item Code	ISO DN	PORT (A)	Overall Length mm	Overall Length in		Length mm	Length in		Hex mm	Hex in		Diameter mm	Diameter in		Diameter mm	Diameter in		Length mm	Length in	Weight Kg	Weight lb
1/4"	F A7 3/8 SAE EXT	Female 801304020 *	6,3	9/16 -18UNF	G	-	-	F	-	-	C	-	-	I	-	-	E	-	-	L	10,0	0,39	-	-
	M A7 3/8 SAE EXT	Male 801304021 *						D	51,9	2,04	B	22,0	0,87	H	23,8	0,94	J	16,1	0,63				-	-
3/8"	F A9 3/8 SAE EXT	Female 801304036 *	10	9/16 - 18UNF	G	-	-	F	-	-	C	-	-	I	-	-	E	-	-	L	9,9	0,39	-	-
	M A9 3/8 SAE EXT	Male 801304037 *						D	65,5	2,58	B	27,0	1,06	H	29,0	1,14	J	19,7	0,78				0,15	0,32
3/8"	F A9 1/2 SAE EXT	Female 801304032	10	3/4 - 16UNF	G	116,8	4,60	F	68,7	2,70	C	30,0	1,18	I	32,0	1,26	E	32,0	1,26	L	11,1	0,44	0,26	0,57
	M A9 1/2 SAE EXT	Male 801304033						D	64,1	2,52	B	27,0	1,06	H	29,0	1,14	J	19,7	0,78				0,15	0,32
1/2"	F A13 5/8 SAE EXT	Female 801304046 *	12,5	7/8 - 14UNF	G	-	-	F	-	-	C	-	-	I	-	-	E	-	-	L	12,7	0,50	-	-
	M A13 5/8 SAE EXT	Male 801304047 *						D	72,7	2,86	B	36,0	1,42	H	40,0	1,57	J	24,5	0,96				0,28	0,61
5/8"	F A15 3/4 SAE EXT	Female 801304022 *	16	1-1/16-12UN	G	140,1	5,52	F	82,6	3,25	C	41,0	1,61	I	44,8	1,76	E	42,0	1,65	L	15,1	0,59	0,56	1,23
	M A15 3/4 SAE EXT	Male 801304023 *						D	75,1	2,96	B	36,0	1,42	H	38,5	1,52	J	27,0	1,06				0,29	0,65

* Available upon request.

Stucchi®

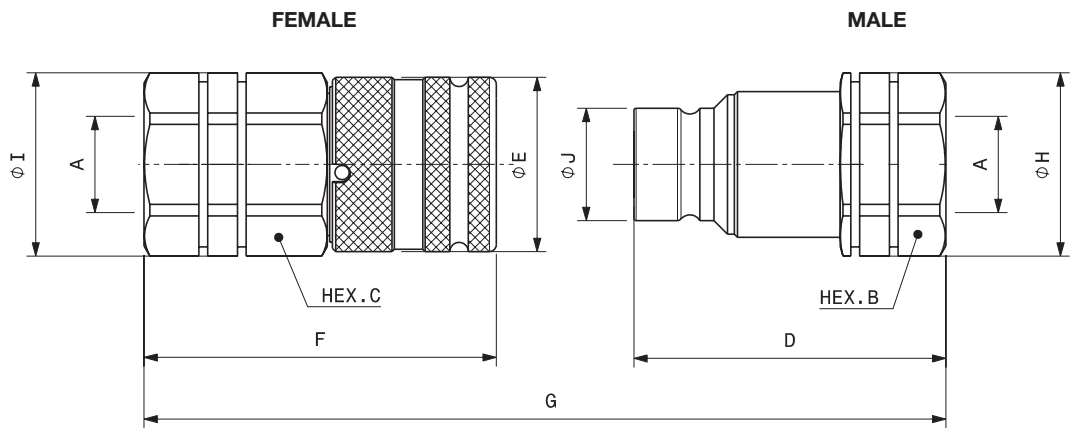

Port description: FEMALE THREAD SAE (ISO 11926-1 & SAEJ1926-1)

BODY SIZE	Descriptive Code	Item Code	A NEW	ISO DM	PORT (A)	Overall Length mm	Overall Length in		Length mm	Length in		Hex mm	Hex in		Diameter mm	Diameter in		Diameter mm	Diameter in	Weight kg	Weight lb
1/8"	F A4 3/16 SAE	Female 801304002		-	3/8-24UNF	G	68,4	2,69	F	40,0	1,57	C	19,0	0,75	I	20,5	0,81	E	20,0	0,79	0,08	0,17
	M A4 3/16 SAE	Male 801304003							D	36,3	1,43	B	17,0	0,67	H	18,5	0,73	J	11,6	0,46	0,04	0,08
1/8"	F A4 1/4 SAE	Female 801304044		-	7/16 - 20UNF	G	84,3	3,32	F	44,0	1,73	C	19,0	0,75	I	20,5	0,81	E	20,0	0,79	0,08	0,17
	M A4 1/4 SAE	Male 801304045							D	40,3	1,59	B	17,0	0,67	H	18,5	0,73	J	11,6	0,46	0,04	0,09
1/4"	F A7 3/8 SAE	Female 801304004		6,3	9/16-18UNF	G	96,2	3,79	F	56,1	2,21	C	27,0	1,06	I	29,0	1,14	E	28,0	1,10	0,20	0,44
	M A7 3/8 SAE	Male 801304017							D	50,9	2,00	B	22,0	0,87	H	23,8	0,94	J	16,1	0,63	0,09	0,20
3/8"	F A9 3/8 SAE	Female 801304006		10	9/16-18UNF	G	108,8	4,28	F	64,8	2,55	C	30,0	1,18	I	32,0	1,26	E	32,0	1,26	0,27	0,60
	M A9 3/8 SAE	Male 801304005							D	60,0	2,36	B	27,0	1,06	H	29,0	1,14	J	19,7	0,78	0,08	0,19
3/8"	F A9 1/2 SAE	Female 801304008		10	3/4-16UNF	G	116,3	4,58	F	69,8	2,75	C	30,0	1,18	I	32,0	1,26	E	32,0	1,26	0,29	0,63
	M A9 1/2 SAE	Male 801304007							D	62,5	2,46	B	27,0	1,06	H	29,0	1,14	J	19,7	0,78	0,15	0,32
3/8"	F A9 5/8 SAE	Female 801304030		10	7/8-14UNF	G	121,3	4,78	F	71,8	2,83	C	30,0	1,18	I	32,0	1,26	E	32,0	1,26	0,28	0,61
	M A9 5/8 SAE	Male 801304031							D	65,5	2,58	B	30,0	1,18	H	32,0	1,26	J	19,7	0,78	0,17	0,36
1/2"	F A13 5/8 SAE	Female 801304024		12,5	7/8-14UNF	G	131,5	5,18	F	78,8	3,10	C	36,0	1,42	I	40,0	1,57	E	38,0	1,50	0,46	1,01
	M A13 5/8 SAE	Male 801304025							D	70,0	2,76	B	36,0	1,42	H	40,0	1,57	J	24,5	0,96	0,29	0,65
1/2"	F A13 3/4 SAE	Female 801304010		12,5	1-1/1612UN	G	139,0	5,47	F	83,8	3,30	C	36,0	1,42	I	40,0	1,57	E	38,0	1,50	0,46	1,02
	M A13 3/4 SAE	Male 801304009							D	72,5	2,85	B	36,0	1,42	H	40,0	1,57	J	24,5	0,96	0,28	0,61
5/8"	F A15 3/4 SAE	Female 801304012		16	1-1/16-12UN	G	139,4	5,49	F	84,0	3,31	C	41,0	1,61	I	44,8	1,76	E	42,0	1,65	0,63	1,38
	M A15 3/4 SAE	Male 801304011							D	73,0	2,87	B	36,0	1,42	H	38,5	1,52	J	27,0	1,06	0,30	0,65
3/4"	F A17 3/4 SAE	Female 801304028	812504030	19	1-1/16-12UN	G	160,5	6,32	F	98,8	3,89	C	46,0	1,81	I	49,8	1,96	E	48,0	1,89	0,99	2,17
	M A17 3/4 SAE	Male 801304029	812504031						D	83,7	3,30	B	46,0	1,81	H	49,8	1,96	J	30,0	1,18	0,52	1,15
3/4"	F A17 1 SAE	Female 801304000	812504026	19	1-5/16-12UN	G	160,5	6,32	F	98,8	3,89	C	46,0	1,81	I	49,8	1,96	E	48,0	1,89	0,93	2,05
	M A17 1 SAE	Male 801304001	812504027						D	83,7	3,30	B	46,0	1,81	H	49,8	1,96	J	30,0	1,18	0,47	1,03
3/4"	F A17 1-1/4 SAE	Female 801304026 *	812504028	19	1-5/8-12UN	G	191,1	7,52	F	103,3	4,07	C	55,0	2,17	I	59,8	2,35	E	48,0	1,89	0,00	0,00
	M A17 1-1/4 SAE	Male 801304027 *	812504029						D	87,8	3,46	B	55,0	2,17	H	59,8	2,35	J	30,0	1,18	0,00	0,00
1"	F A21 1 SAE	Female 801304038	812504034	25	1-5/16-12UN	G	178,6	7,03	F	104,8	4,13	C	55,0	2,17	I	59,8	2,35	E	55,0	2,17	1,42	3,12
	M A21 1 SAE	Male 801304039	812504035						D	96,8	3,81	B	55,0	2,17	H	59,8	2,35	J	36,0	1,42	0,89	1,96
1"	F A21 1-1/4 SAE	Female 801304014	812504032	25	1-5/8-12UN	G	172,8	6,80	F	105,8	4,17	C	55,0	2,17	I	59,8	2,35	E	55,0	2,17	1,32	2,91
	M A21 1-1/4 SAE	Male 801304013	812504033						D	90,0	3,54	B	55,0	2,17	H	59,8	2,35	J	36,0	1,42	0,71	1,56
	F A25 1 SAE	Female 801304040 *	812504056	31,5	1-5/16-12UN	G	206,8	8,14	F	125,1	4,93	C	55,0	2,17	I	65,0	2,56	E	65,0	2,56	2,09	4,61
	M A25 1 SAE	Male 801304041 *	812504057						D	105,0	4,13	B	55,0	2,17	H	59,8	2,35	J	44,0	1,73	1,13	2,49
	F A25 1-1/4 SAE	Female 801304042	812504058	31,5	1-5/8-12UN	G	206,8	8,14	F	125,1	4,93	C	55,0	2,17	I	65,0	2,56	E	65,0	2,56	2,07	4,56
	M A25 1-1/4 SAE	Male 801304043	812504059						D	105,0	4,13	B	55,0	2,17	H	59,8	2,35	J	44,0	1,73	1,09	2,39
	F A30 1-1/2 SAE	Female 801304016	812504044	38	1-7/8-12UN	G	214,9	8,46	F	132,4	5,21	C	65,0	2,56	I	82,0	3,23	E	80,0	3,15	3,16	6,97
	M A30 1-1/2 SAE	Male 801304015	812504045						D	111,1	4,37	B	65,0	2,56	H	69,8	2,75	J	57,0	2,24	1,66	3,66

* Available upon request.

Part numbers highlighted in grey are phasing out and will be replaced by A NEW items.

Stucchi®

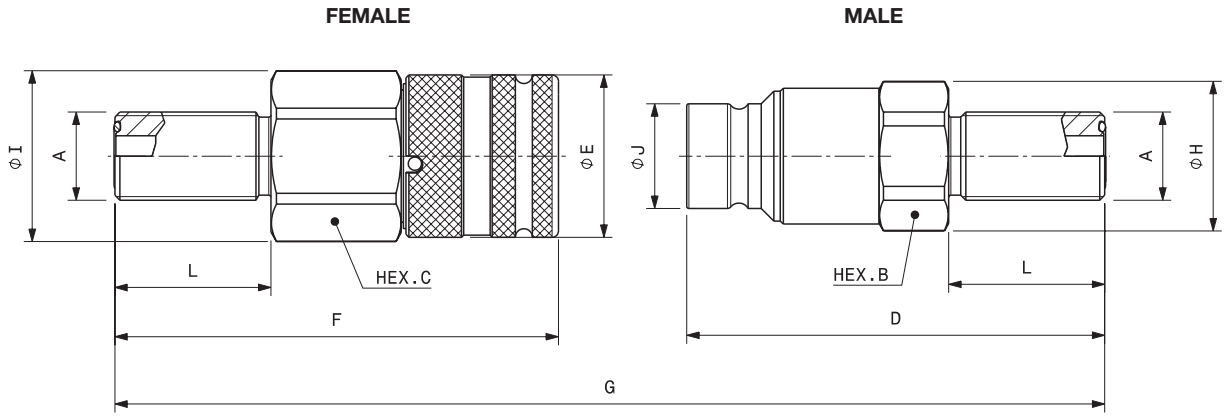

Port description: ORFS BULKHEAD (ISO 8434-3 & SAE J1453)

BODY SIZE	Descriptive Code	Item Code	A NEW	ISO DM	PORT (A)	Overall Length			Length			Hex			Diameter			Diameter			Length			Weight	
							mm	in		mm	in		mm	in		mm	in		mm	in		mm	in	Kg	lb
3/8"	F A9 3/8 ORFS BH	Female 801313014		10	11/16-16UN	G	169,3	6,67	F	95,1	3,74	C	30,0	1,18	I	32,0	1,26	E	32,0	1,26	L	34,0	1,34	0,32	0,71
	M A9 3/8 ORFS BH	Male 801313015							D	90,2	3,55	B	27,0	1,06	H	29,0	1,14	J	19,7	0,78				0,19	0,41
1/2"	F A13 1/2 ORFS BH	Female 801313018		12,5	13/16-16UN	G	184,3	7,26	F	103,8	4,09	C	36,0	1,42	I	40,0	1,57	E	38,0	1,50	L	36,5	1,44	0,47	1,03
	M A13 1/2 ORFS BH	Male 801313019							D	97,8	3,85	B	32,0	1,26	H	35,0	1,38	J	24,5	0,96				0,30	0,67
1/2"	F A13 5/8 ORFS BH33	Female 801313000		12,5	1-14UNS	G	171,7	6,76	F	96,0	3,78	C	36,0	1,42	I	40,0	1,57	E	38,0	1,50	L	33,0	1,30	0,46	1,02
	M A13 5/8 ORFS BH33	Male 801313001							D	93,0	3,66	B	32,0	1,26	H	35,0	1,38	J	24,5	0,96				0,32	0,69
1/2"	F A13 3/4 ORFS BH	Female 801313004		12,5	1-3/16-12UN	G	189,1	7,44	F	104,7	4,12	C	36,0	1,26	I	40,0	1,57	E	38,0	1,50	L	41,7	1,64	0,52	2,34
	M A13 3/4 ORFS BH	Male 801313005							D	101,7	4,00	B	32,0	1,26	H	35,0	1,38	J	24,5	0,96				0,37	0,82
1/2"	F A13 1 ORFS BH	Female 801313006		12,5	1-7/16-12UN	G	190,1	7,48	F	105,2	4,14	C	38,0	1,50	I	42,0	1,65	E	38,0	1,50	L	42,2	1,66	0,60	5,16
	M A13 1 ORFS BH	Male 801313007							D	102,2	4,02	B	38,0	1,50	H	42,0	1,65	J	24,5	0,96				0,47	1,03
5/8"	F A15 3/4 ORFS BH	Female 801313022		16	1-3/16-12UN	G	196,4	7,73	F	111,5	4,39	C	41,0	1,61	I	44,8	1,76	E	42,0	1,65	L	41,5	1,63	0,69	1,52
	M A15 3/4 ORFS BH	Male 801313023							D	102,5	4,04	B	36,0	1,42	H	38,5	1,52	J	27,0	1,06				0,41	0,90
3/4"	F A17 1 ORFS BH	Female 801313008	812513024	19	1-7/16-12UN	G	227,7	8,96	F	132,5	5,22	C	46,0	1,81	I	49,8	1,96	E	48,0	1,89	L	42,2	1,66	1,13	2,48
	M A17 1 ORFS BH	Male 801313009	812513025						D	117,2	4,61	B	46,0	1,81	H	49,8	1,96	J	30,0	1,18				0,66	1,46
1"	F A21 1-1/4 ORFS BH	Female 801313026 *	812513030	25	1-11/16-12UN	G	234,8	9,24	F	133,8	5,27	C	55,0	2,17	I	59,8	2,35	E	55,0	2,17	L	42,0	1,65	1,51	3,32
	M A21 1-1/4 ORFS BH	Male 801313027 *	812513031						D	124,0	4,88	B	55,0	2,17	H	59,8	2,35	J	36,0	1,42				0,97	2,13

* Available upon request.

Locknuts available upon request.

Part numbers highlighted in grey are phasing out and will be replaced by A NEW items.

Stucchi®

FEMALE

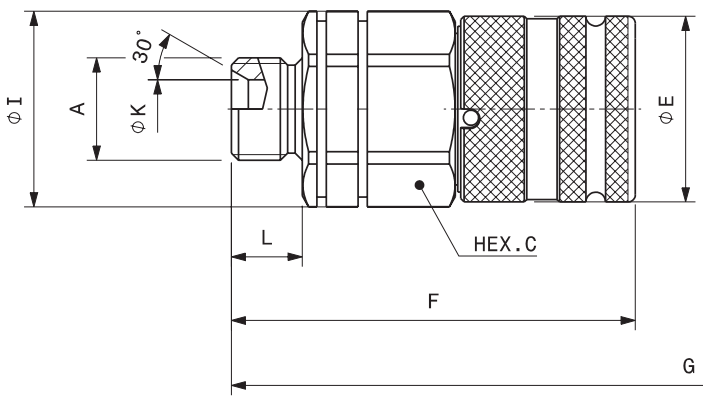

MALE

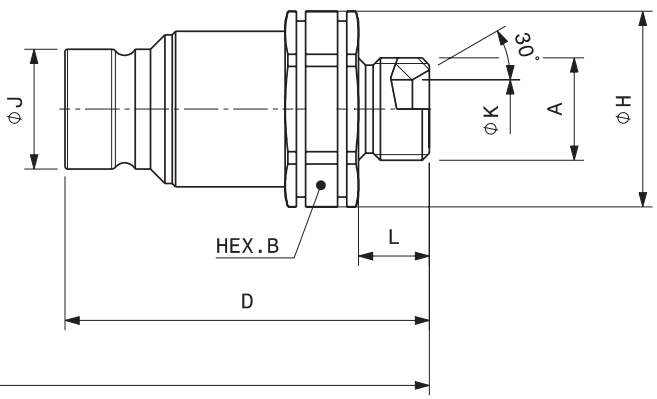

Port description: MALE THREAD BSPP (ISO 8434-6)

BODY SIZE	Descriptive Code	Item Code		ISO DN	PORT (A)	Overall Length			Length			Hex			Diameter			Diameter			Length			Weight	
							mm	in		mm	in		mm	in		mm	in		mm	in		mm	in	kg	lb
1/4"	F A7 1/4 BSP EXT	Female	801300030	6,3	1/4"	G	95,2	3,75	F	53,1	2,09	C	27,0	1,06	I	29,0	1,14	E	28,0	1,10	L	11,0	0,43	0,16	0,34
	M A7 1/4 BSP EXT	Male	801300029						D	52,9	2,08	B	22,0	0,87	H	23,8	0,94	J	16,1	0,63				0,08	0,18
3/8"	F A9 3/8 BSP EXT	Female	801300010	10	3/8"	G	121,1	4,77	F	71,1	2,80	C	30,0	1,18	I	32,0	1,26	E	32,0	1,26	L	13,0	0,51	0,26	0,57
	M A9 3/8 BSP EXT	Male	801300009						D	66,0	2,60	B	27,0	1,06	H	29,0	1,14	J	19,7	0,78				0,14	0,31
3/8"	F A9 1/2 BSP EXT	Female	801300012	10	1/2"	G	122,6	4,83	F	71,1	2,80	C	30,0	1,18	I	32,0	1,26	E	32,0	1,26	L	14,5	0,57	0,26	0,57
	M A9 1/2 BSP EXT	Male	801300011						D	67,5	2,66	B	27,0	1,06	H	29,0	1,14	J	19,7	0,78				0,15	0,33
1/2"	F A13 1/2 BSP EXT	Female	801300018	12,5	1/2"	G	139,8	5,50	F	82,6	3,25	C	36,0	1,42	I	40,0	1,57	E	38,0	1,50	L	14,5	0,57	0,43	0,94
	M A13 1/2 BSP EXT	Male	801300017						D	74,5	2,93	B	36,0	1,42	H	40,0	1,57	J	24,5	0,96				0,27	0,60
1/2"	F A13 3/4 BSP EXT	Female	801300020 ◆	12,5	3/4"	G	143,8	5,66	F	84,6	3,33	C	36,0	1,42	I	40,0	1,57	E	38,0	1,50	L	16,5	0,65	0,45	0,98
	M A13 3/4 BSP EXT	Male	801300019 ◆						D	76,5	3,01	B	36,0	1,42	H	40,0	1,57	J	24,5	0,96				0,29	0,63
5/8"	F A15 3/4 BSP EXT	Female	801300032 ◆	16	3/4"	G	-	-	F	84,0	3,31	C	41,0	1,61	I	44,8	1,76	E	42,0	1,65	L	16,5	0,65	0,66	1,45
	M A15 3/4 BSP EXT	Male	801300033 ◆						D	-	-	B	-	-	H	-	-	J	-	-				-	-

◆ Available upon request.

FEMALE

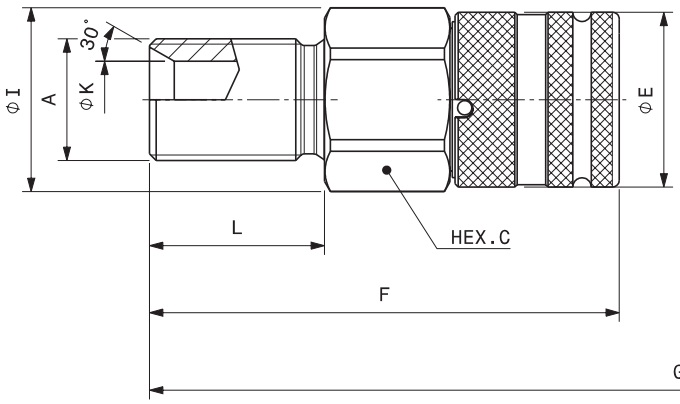

MALE

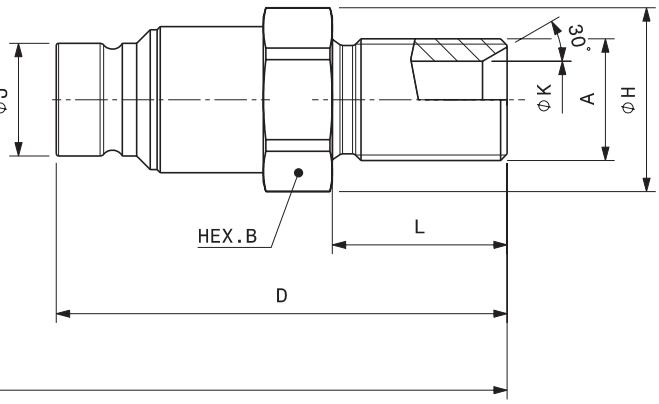

Port description: MALE THREAD BSPP BULKHEAD (ISO 8434-6)

BODY SIZE	Descriptive Code	Item Code		A NEW	ISO DM	PORT (A)	Overall Length			Length			Hex			Diameter			Diameter			Length			Weight	
								mm	in		mm	in		mm	in		mm	in		mm	in		mm	in	kg	lb
3/8"	F A9 3/8 BSP BH32	Female	801300044		10	3/8"	G	159,1	6,26	F	90,1	3,55	C	30,0	1,18	I	32,0	1,26	E	32,0	1,26	L	32,0	32,00	0,29	0,63
	M A9 3/8 BSP BH32	Male	801300045							D	85,0	3,35	B	27,0	1,06	H	29,0	1,14	J	19,7	0,78				0,16	0,35
3/8"	F A9 1/2 BSP BH35	Female	801300054 ◆		10	1/2"	G	165,8	6,53	F	93,4	3,68	C	30,0	1,18	I	32,0	1,26	E	32,0	1,26	L	35,0	35,00	0,31	0,68
	M A9 1/2 BSP BH35	Male	801300055 ◆							D	88,4	3,48	B	27,0	1,06	H	29,0	1,14	J	19,7	0,78				0,19	0,41
1/2"	F A13 3/4 BSP BH38	Female	801300056		12,5	3/4"	G	182,8	7,20	F	102,1	4,02	C	36,0	1,42	I	40,0	1,57	E	38,0	1,50	L	38,0	38,00	0,46	1,01
	M A13 3/4 BSP BH38	Male	801300057							D	98,0	3,86	B	36,0	1,42	H	40,0	1,57	J	24,5	0,96				0,33	0,73
3/4"	F A17 1 BSP BH41	Female	801300058	812500042	19	1"	G	221,3	8,71	F	127,3	5,01	C	46,0	1,81	I	49,8	1,96	E	48,0	1,89	L	41,0	41,00	1,00	2,19
	M A17 1 BSP BH41	Male	801300059	812500043						D	116,0	4,57	B	46,0	1,81	H	49,8	1,96	J	30,0	1,18				0,57	1,26

◆ Available upon request.
Locknuts available upon request.
Part numbers highlighted in grey are phasing out and will be replaced by A NEW items.

Stucchi®

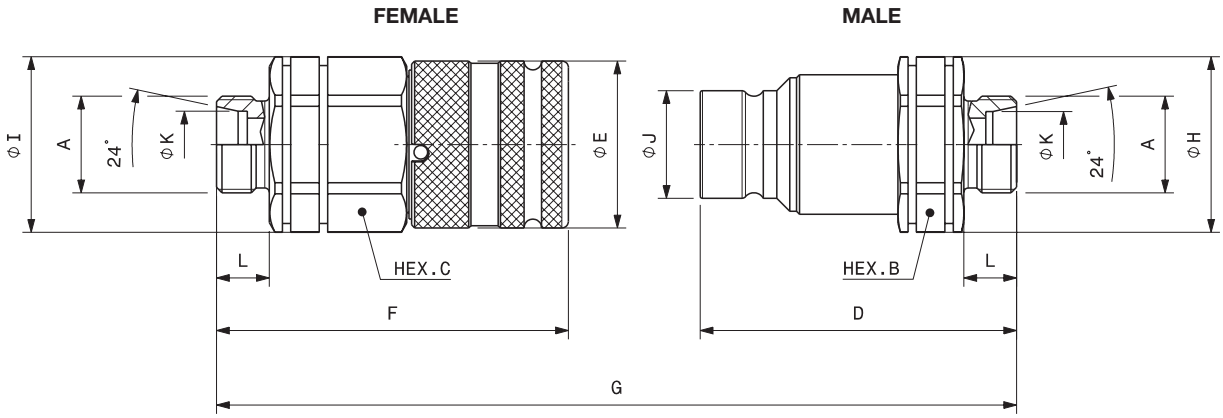

Port description: MALE THREAD L SERIES -24° CONE (ISO 8434-1 & DIN 2353)

BODY SIZE	Descriptive Code	Item Code		A NEW	ISO DN	PORT (A)	Overall Length			Length			Hex			Diameter			Diameter			Diameter			Length			Weight	
								mm	in		mm	in		mm	in		mm	in		mm	in		mm	in		mm	in	kg	lb
1/4"	F A7 L8	Female	801308014		6,3	M14x1.5	G	93,2	3,67	F	52,1	2,05	C	27,0	1,06	I	29,0	1,14	E	28,0	1,10	K	8,2	0,32	L	10,00	0,39	0,16	0,34
	M A7 L8	Male	801308015							D	51,9	2,04	B	22,0	0,87	H	23,8	0,94	J	16,1	0,63							0,80	1,76
1/4"	F A7 L10	Female	801308010		6,3	M16x1,5	G	95,2	3,75	F	53,1	2,09	C	27,0	1,06	I	29,0	1,14	E	28,0	1,10	K	10,2	0,40	L	11,00	0,43	0,12	0,25
	M A7 L10	Male	801308011							D	52,9	2,08	B	22,0	0,87	H	23,8	0,94	J	16,1	0,63							0,08	0,19
1/4"	F A7 L12	Female	801308036 ♦		6,3	M18x1.5	G	-	-	F	53,1	2,09	C	27,0	1,06	I	29,0	1,14	E	28,0	1,10	K	12,2	0,48	L	11,00	0,43	0,16	0,34
	M A7 L12	Male	801308037 ♦							D	-	-	B	-	-	H	-	-	J	-	-							-	-
3/8"	F A9 L8	Female	801308038		10	M14x1.5	G	117,5	4,63	F	69,0	2,72	C	30,0	1,18	I	32,0	1,26	E	32,0	1,26	K	8,0	0,32	L	10,00	0,39	0,27	0,59
	M A9 L8	Male	801308039							D	64,5	2,54	B	30,0	1,18	H	32,0	1,26	J	19,7	0,78							0,16	0,34
3/8"	A 9 L10	Female	801308008		10	M16x1,5	G	119,1	4,69	F	69,6	2,74	C	30,0	1,18	I	32,0	1,26	E	32,0	1,26	K	10,2	0,40	L	11,00	0,43	0,26	0,57
	A 9 L10	Male	801308009							D	65,5	2,58	B	30,0	1,18	H	32,0	1,26	J	19,7	0,78							0,16	0,34
3/8"	A 9 L12	Female	801308004		10	M18x1.5	G	117,1	4,61	F	67,6	2,66	C	30,0	1,18	I	32,0	1,26	E	32,0	1,26	K	12,2	0,48	L	11,00	0,43	0,25	0,55
	A 9 L12	Male	801308005							D	65,5	2,58	B	30,0	1,18	H	32,0	1,26	J	19,7	0,78							0,16	0,34
3/8"	A 9 L15	Female	801308006		10	M22x1.5	G	119,1	4,69	F	68,6	2,70	C	30,0	1,18	I	32,0	1,26	E	32,0	1,26	K	15,2	0,60	L	12,00	0,47	0,26	0,56
	A 9 L15	Male	801308007							D	66,5	2,62	B	30,0	1,18	H	32,0	1,26	J	19,7	0,78							0,16	0,35
3/8"	F A9 L18	Female	801308034		10	M26x1.5	G	119,1	4,69	F	68,6	2,70	C	30,0	1,18	I	32,0	1,26	E	32,0	1,26	K	18,2	0,72	L	12,00	0,47	0,27	0,60
	M A9 L18	Male	801308035							D	66,5	2,62	B	30,0	1,18	H	32,0	1,26	J	19,7	0,78							0,17	0,37
1/2"	A 13 L12	Female	801308000		12,5	M18x1.5	G	132,8	5,23	F	79,1	3,11	C	36,0	1,42	I	40,0	1,57	E	38,0	1,50	K	12,2	0,48	L	11,00	0,43	0,42	0,92
	A 13 L12	Male	801308001							D	71,0	2,80	B	36,0	1,42	H	40,0	1,57	J	24,5	0,96							0,26	0,57
1/2"	A 13 L15	Female	801308002		12,5	M22x1.5	G	134,8	5,31	F	80,1	3,15	C	36,0	1,42	I	40,0	1,57	E	38,0	1,50	K	15,2	0,60	L	12,00	0,47	0,43	0,94
	A 13 L15	Male	801308003							D	72,0	2,83	B	36,0	1,42	H	40,0	1,57	J	24,5	0,96							0,27	0,58
1/2"	F A13 L18	Female	801308042		12,5	M26x1.5	G	134,8	5,31	F	80,1	3,15	C	36,0	1,42	I	40,0	1,57	E	38,0	1,50	K	18,2	0,72	L	12,00	0,47	0,44	0,96
	M A13 L18	Male	801308043							D	72,0	2,83	B	36,0	1,42	H	40,0	1,57	J	24,5	0,96							0,29	0,64
1/2"	F A13 L22	Female	801308040		12,5	M30x2	G	138,8	5,46	F	82,1	3,23	C	36,0	1,42	I	40,0	1,57	E	38,0	1,50	K	22,2	0,87	L	14,00	0,55	0,44	0,96
	M A13 L22	Male	801308041							D	74,0	2,91	B	36,0	1,42	H	40,0	1,57	J	24,5	0,96							0,28	0,61
5/8"	F A15 L15	Female	801308016		16	M22x1.5	G	139,9	5,51	F	84,5	3,33	C	41,0	1,61	I	44,8	1,76	E	42,0	1,65	K	15,2	0,60	L	12,00	0,47	0,59	1,29
	M A15 L15	Male	801308017							D	73,0	2,87	B	36,0	1,42	H	38,5	1,52	J	27,0	1,06							0,28	0,62
5/8"	F A15 L18	Female	801308018		16	M26x1.5	G	137,4	5,41	F	82,0	3,23	C	41,0	1,61	I	44,8	1,76	E	42,0	1,65	K	18,2	0,72	L	12,00	0,47	0,58	1,27
	M A15 L18	Male	801308019							D	73,0	2,87	B	36,0	1,42	H	38,5	1,52	J	27,0	1,06							0,29	0,64
5/8"	F A15 L22	Female	801308020		16	M30x2	G	137,8	5,46	F	81,4	3,20	C	41,0	1,61	I	44,8	1,76	E	42,0	1,65	K	22,2	0,87	L	14,00	0,55	0,55	1,21
	M A15 L22	Male	801308021							D	74,0	2,91	B	36,0	1,42	H	38,5	1,52	J	27,0	1,06							0,28	0,63
3/4"	F A17 L18	Female	801308022	812508024	19	M26x1.5	G	168,3	6,63	F	101,3	3,99	C	46,0	1,81	I	49,8	1,96	E	48,0	1,89	K	18,2	0,72	L	12,00	0,47	0,93	2,05
	M A17 L18	Male	801308023	812508025						D	89,0	3,50	B	46,0	1,81	H	49,8	1,96	J	30,0	1,18							0,51	1,11
3/4"	F A17 L22	Female	801308024	812508026	19	M30x2	G	167,3	6,59	F	100,3	3,95	C	46,0	1,81	I	49,8	1,96	E	48,0	1,89	K	22,2	0,87	L	14,00	0,55	0,91	2,00
	M A17 L22	Male	801308025	812508027						D	89,0	3,50	B	46,0	1,81	H	49,8	1,96	J	30,0	1,18							0,48	1,06

♦ Available upon request.

Part numbers highlighted in grey are phasing out and will be replaced by A NEW items.

Stucchi®

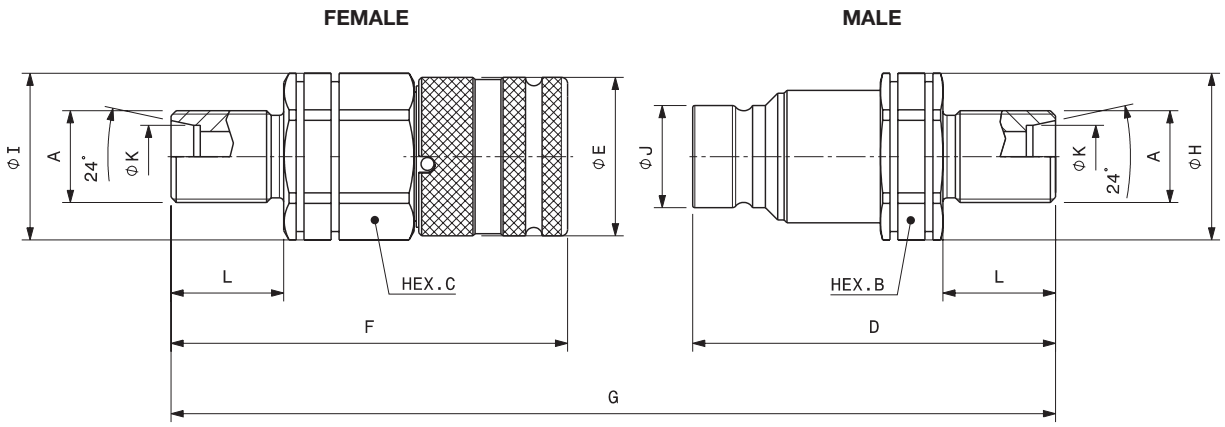

Port description: MALE THREAD L SERIES -24° CONE BULKHEAD (ISO 8434-1 & DIN 2353)

BODY SIZE	Descriptive Code	Item Code	A NEW	ISO DN	PORT (A)	Overall Length			Length			Hex			Diameter			Diameter			Diameter			Length			Weight	
							mm	in		mm	in		mm	in		mm	in		mm	in		mm	in		mm	in	kg	lb
1/4"	F A7 L8 SCHOTT	Female 801310014		6,3	M14x1.5	G	123,2	4,85	F	67,1	2,64	C	27,0	1,06	I	29,0	1,14	E	28,0	1,10	K	8,2	0,32	L	25,0	0,98	0,17	0,36
	M A7 L8 SCHOTT	Male 801310015							D	66,9	2,63	B	22,0	0,87	H	23,8	0,94	J	16,1	0,63							0,10	0,21
1/4"	F A7 L10 SCHOTT	Female 801310010		6,3	M16x1.5	G	125,2	4,93	F	68,1	2,68	C	27,0	1,06	I	29,0	1,14	E	28,0	1,10	K	10,2	0,40	L	26,0	1,02	0,17	0,37
	M A7 L10 SCHOTT	Male 801310011							D	67,9	2,67	B	22,0	0,87	H	23,8	0,94	J	16,1	0,63							0,10	0,22
3/8"	F A9 L8 SCHOTT	Female 801310040 *		10	M14x1.5	G	-	-	F	-	-	C	-	-	I	-	-	E	-	-	K	8,2	0,32	L	25,0	0,98	-	-
	M A9 L8 SCHOTT	Male 801310041 *							D	79,5	3,13	B	30,0	1,18	H	32,0	1,26	J	19,7	0,78							0,16	0,36
3/8"	F A9 L10 SCHOTT	Female 801310008		10	M16x1.5	G	149,1	5,87	F	84,6	3,33	C	30,0	1,18	I	32,0	1,26	E	32,0	1,26	K	10,2	0,40	L	26,0	1,02	0,28	0,61
	M A9 L10 SCHOTT	Male 801310009							D	80,5	3,17	B	30,0	1,18	H	32,0	1,26	J	19,7	0,78							0,17	0,37
3/8"	F A9 L12 SCHOTT	Female 801310004		10	M18x1.5	G	147,1	5,79	F	82,6	3,25	C	30,0	1,18	I	32,0	1,26	E	32,0	1,26	K	12,2	0,48	L	26,0	1,02	0,27	0,59
	M A9 L12 SCHOTT	Male 801310005							D	80,5	3,17	B	30,0	1,18	H	32,0	1,26	J	19,7	0,78							0,17	0,38
3/8"	F A9 L15 SCHOTT	Female 801310006		10	M22x1.5	G	149,1	5,87	F	83,6	3,29	C	30,0	1,18	I	32,0	1,26	E	32,0	1,26	K	15,2	0,60	L	27,0	1,06	0,28	0,62
	M A9 L15 SCHOTT	Male 801310007							D	81,5	3,21	B	30,0	1,18	H	32,0	1,26	J	19,7	0,78							0,19	0,41
3/8"	F A9 L18 SCHOTT	Female 801310036		10	M26x1.5	G	149,1	5,87	F	83,6	3,29	C	30,0	1,18	I	32,0	1,26	E	32,0	1,26	K	18,2	0,72	L	27,0	1,06	0,31	0,67
	M A9 L18 SCHOTT	Male 801310037							D	81,5	3,21	B	30,0	1,18	H	32,0	1,26	J	19,7	0,78							0,21	0,45
1/2"	F A13 L12 SCHOTT	Female 801310000		12,5	M18x1.5	G	162,9	6,41	F	94,1	3,70	C	36,0	1,42	I	40,0	1,57	E	38,0	1,50	K	12,2	0,48	L	26,0	1,02	0,44	0,96
	M A13 L12 SCHOTT	Male 801310001							D	86,1	3,39	B	36,0	1,42	H	40,0	1,57	J	24,5	0,96							0,28	0,61
1/2"	F A13 L15 SCHOTT	Female 801310002		12,5	M22x1.5	G	164,9	6,49	F	95,1	3,74	C	36,0	1,42	I	40,0	1,57	E	38,0	1,50	K	15,2	0,60	L	27,0	1,06	0,45	1,00
	M A13 L15 SCHOTT	Male 801310003							D	87,1	3,43	B	36,0	1,42	H	40,0	1,57	J	24,5	0,96							0,29	0,64
1/2"	F A13 L22 SCHOTT	Female 801310034		12,5	M30x2	G	178,8	7,04	F	102,1	4,02	C	36,0	1,42	I	40,0	1,57	E	38,0	1,50	K	22,2	0,87	L	34,0	1,34	0,49	1,07
	M A13 L22 SCHOTT	Male 801310035							D	94,0	3,70	B	36,0	1,42	H	40,0	1,57	J	24,5	0,96							0,34	0,74
1/2"	F A13 L18 SCHOTT	Female 801310038 *		12,5	M26x1.5	G	-	-	F	95,1	3,74	C	36,0	1,42	I	40,0	1,57	E	38,0	1,50	K	18,2	0,72	L	27,0	1,06	0,48	1,05
	M A13 L18 SCHOTT	Male 801310039 *							D	-	-	B	-	-	H	-	-	J	-	-							-	-
5/8"	F A15 L18 SCHOTT	Female 801310018		16	M26x1.5	G	167,8	6,65	F	97,5	3,84	C	41,0	1,61	I	44,8	1,76	E	42,0	1,65	K	18,2	0,72	L	27,0	1,06	0,62	1,36
	M A15 L18 SCHOTT	Male 801310019							D	87,9	3,46	B	36,0	1,42	H	38,5	1,52	J	27,0	1,06							0,33	0,72
5/8"	F A15 L22 SCHOTT	Female 801310020 *		16	M30x2	G	-	-	F	-	-	C	-	-	I	-	-	E	-	-	K	22,2	0,87	L	34,0	1,34	-	-
	M A15 L22 SCHOTT	Male 801310021 *							D	94,0	3,70	B	36,0	1,42	H	38,5	1,52	J	27,0	1,06							0,35	0,76
3/4"	F A17 L18 SCHOTT	Female 801310022	812510024	19	M26x1.5	G	197,7	7,78	F	116,3	4,58	C	46,0	1,81	I	49,8	1,96	E	48,0	1,89	K	18,2	0,72	L	27,0	1,06	0,98	2,16
	M A17 L18 SCHOTT	Male 801310023	812510025						D	103,4	4,09	B	46,0	1,81	H	49,8	1,96	J	30,0	1,18							0,54	1,19
3/4"	F A17 L22 SCHOTT	Female 801310024	812510026	19	M30x2	G	202,2	7,96	F	120,3	4,74	C	46,0	1,81	I	49,8	1,96	E	48,0	1,89	K	22,2	0,87	L	34,0	1,34	0,97	2,13
	M A17 L22 SCHOTT	Male 801310025	812510027						D	103,9	4,29	B	46,0	1,81	H	49,8	1,96	J	30,0	1,18							0,55	1,20
1"	F A21 L22 SCHOTT	Female 801310026 *	812510028	25	M30x2	G	-	-	F	-	-	C	-	-	I	-	-	E	-	-	K	22,2	0,87	L	34,0	1,34	-	-
	M A21 L22 SCHOTT	Male 801310027 *	812510029						D	120,4	4,74	B	55,0	2,17	H	59,8	2,35	J	36,0	1,42							0,87	1,92
1"	F A21 L28 SCHOTT	Female 801310028 *	812510030	25	M36x2	G	-	-	F	125,8	4,95	C	55,0	2,17	I	59,8	2,35	E	55,0	2,17	K	28,2	1,11	L	34,0	1,34	1,38	3,04
	M A21 L28 SCHOTT	Male 801310029 *	812510031						D	-	-	B	-	-	H	-	-	J	-	-							-	-

* Available upon request.

Locknuts available upon request.

Part numbers highlighted in grey are phasing out and will be replaced by A NEW items.

Stucchi®

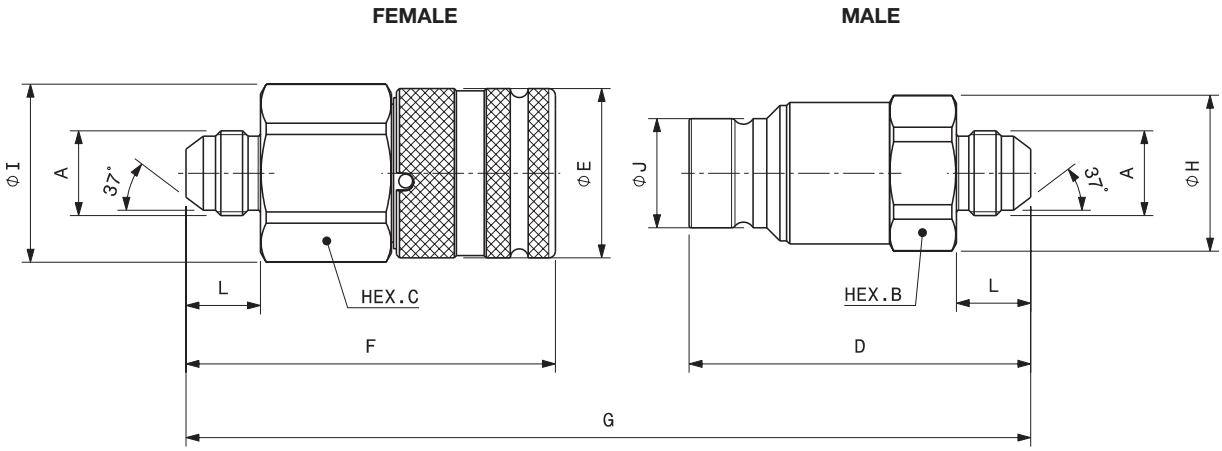

Port description: MALE THREAD JIC - (ISO 8434-2 & SAE J514)

BODY SIZE	Descriptive Code	Item Code		ISO DN	PORT (A)	Overall Length			Length			Hex			Diameter			Diameter			Length			Weight	
							mm	in		mm	in		mm	in		mm	in		mm	in		mm	in	kg	lb
3/8"	**F A9 3/8 JIC**	Female	**801306002** ⬩	10	9/16 - 18UNF	G	127,1	5,00	F	74,1	2,92	C	30,0	1,18	I	32,0	1,26	E	32,0	1,26	L	14,1	0,56	0,27	0,60
	M A9 3/8 JIC	Male	**801306003** ⬩						D	69,0	2,72	B	27,0	1,06	H	29,0	1,14	J	19,7	0,78				0,15	0,32
3/8"	**F A9 1/2 JIC**	Female	**801306004**	10	3/4 - 16UNF	G	128,0	5,04	F	74,3	2,93	C	30,0	1,18	I	32,0	1,26	E	32,0	1,26	L	16,7	0,66	0,26	0,57
	M A9 1/2 JIC	Male	**801306005**						D	69,7	2,74	B	27,0	1,06	H	29,0	1,14	J	19,7	0,78				0,15	0,32
3/8"	**F A9 5/8 JIC**	Female	**801306000** ⬩	10	7/8 -14UNF	G	132,2	5,20	F	75,9	2,99	C	30,0	1,18	I	32,0	1,26	E	32,0	1,26	L	19,3	0,76	0,28	0,61
	M A9 5/8 JIC	Male	**801306001** ⬩						D	72,3	2,85	B	27,0	1,06	H	29,0	1,14	J	19,7	0,78				0,16	0,35
3/8"	**F A9 5/8 JIC**	Female	**801306000** ⬩	10	7/8 -14UNF	G	132,2	5,20	F	75,9	2,99	C	30,0	1,18	I	32,0	1,26	E	32,0	1,26	L	19,3	0,76	0,28	0,61
	M A9 5/8 JIC	Male	**801306001** ⬩						D	72,3	2,85	B	27,0	1,06	H	29,0	1,14	J	19,7	0,78				0,16	0,35
1/2"	**F A13 7/8 JIC**	Female	**801306006**	12,5	1-3/16-12UN	G	156,0	6,14	F	90,7	3,57	C	36,0	1,42	I	40,0	1,57	E	38,0	1,50	L	22,6	0,89	0,42	0,93
	M A13 7/8 JIC	Male	**801306007**						D	82,6	3,25	B	36,0	1,42	H	40,0	1,57	J	24,5	0,96				0,28	0,62
1/2"	**F A13 1 JIC**	Female	**801306008** ⬩	12,5	1-5/16-12UN	G	157,0	6,18	F	91,2	3,59	C	36,0	1,42	I	40,0	1,57	E	38,0	1,50	L	23,1	0,91	0,41	0,91
	M A13 1 JIC	Male	**801306009** ⬩						D	83,1	3,27	B	36,0	1,42	H	40,0	1,57	J	24,5	0,96				0,33	0,72
1/2"	**F A13 3/4 JIC**	Female	**801306012**	12,5	1-1/16-12UN	G	154,6	6,09	F	90,0	3,54	C	36,0	1,42	I	40,0	1,57	E	38,0	1,50	L	21,9	0,86	0,41	0,90
	M A13 3/4 JIC	Male	**801306013**						D	81,9	3,22	B	36,0	1,42	H	40,0	1,57	J	24,5	0,96				0,28	0,61
1/2"	**F A13 5/8 JIC**	Female	**801306018** ⬩	12,5	7/8 -14UNF	G	-	-	F	-	-	C	-	-	I	-	-	E	-	-	L	19,3	0,76	-	-
	M A13 5/8 JIC	Male	**801306019** ⬩						D	79,3	3,12	B	36,0	1,42	H	35,0	1,38	J	24,5	0,96				0,26	0,57
5/8"	**F A15 1 JIC**	Female	**801306020** ⬩	16	1 - 5/16 -12UN	G	150,0	5,91	F	84,5	3,33	C	41,0	1,61	I	44,8	1,76	E	42,0	1,65	L	23,1	0,91	0,54	1,18
	M A15 1 JIC	Male	**801306021** ⬩						D	83,1	3,27	B	36,0	1,42	H	38,5	1,52	J	27,0	1,06				0,32	0,69

⬩ Available upon request.

Zinc Nickel version

A Series is available upon request also in Zinc Nickel version.

The Zinc Nickel plating ensures high resistance to corrosion and it is ideal for hydraulic equipment applications where an improved corrosion resistance is necessary.

For specific codes, configuration or any other information, please contact Stucchi Technical Support.

While maintaining the same interchangeability, the shape differs from the A series in Cr3 due to the addition of the groove for the cap lanyard and in some cases the dimensions may also be different. Request the drawing with overall dimensions.

90° version

A Series is available upon request also in special configuration with 90° fitting.

This version is ideal for applications with less space that requires a compact design and it guarantees the correct bending of the hose.

For specific codes, configuration or any other information, please contact Stucchi Technical Support.

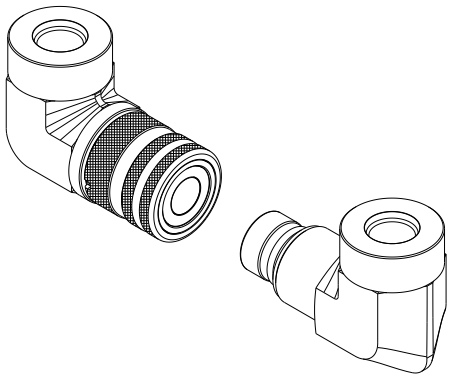

Panel mounting

A Series is available upon request also as panel mounting version.

BC: Snap Ring Solution
Grooves on the male body and on the female sleeve.

BR: Snap Ring Solution
Grooves on the male adaptor and on the female adaptor.

BT: Lock Ring Solution
Thread on the male body and female body.

For specific codes, dimensions or any other information, please contact Stucchi Technical Support.

Using the BC and BT versions mounted on the panel, you obtain the breakaway function, avoiding damages of the hydraulic connections in case of strong axial force during unintended disconnection.

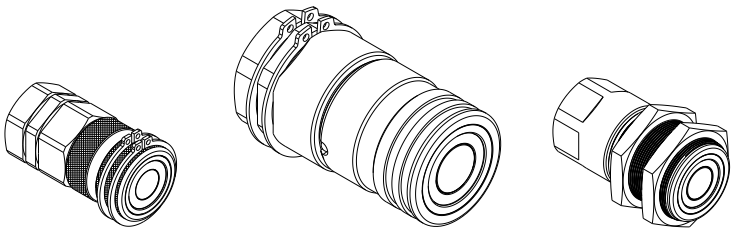

BC **BR** **BT**

SS version

For specific cases, A Series is available upon request without the safety lock ball.

For additional information, please contact Stucchi Technical Support.

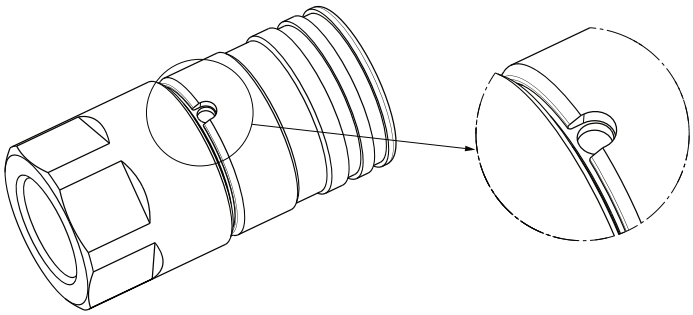

SPARE KIT SEAL FOR MALE

Repair kit / OR+BK		
Body Size	Description	Part Number
1/4”	M A7	815700519
3/8”	M A9	815700337
1/2”	M A13	815700339
5/8”	M A15	815700341
3/4”	M A17	815700343
1”	M A21	815700345
1 1/4”	M A25	815700693
1 1/2”	M A30	815700521

O-Ring in Nitrile
BackUp in Teflon®

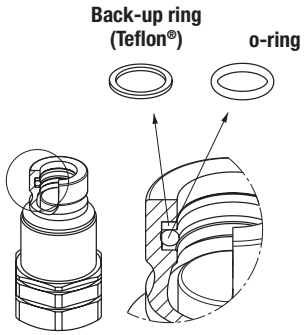

PROTECTIVE CAPS FOR A SERIES

Protective caps are always recommended to protect the couplings from damage, dirt inclusion, and will increase the product life. This is particularly important in mobile applications where exposure to weather and aggregate materials are common.
For the A series are available three kind of materials:

- plastic caps complete with lanyard (standard color: red, other colors available upon request)
- aluminum caps complete with lanyard (standard colors: natural aluminum, other colors available upon request)
- plastic caps, clip system (standard color: red, other colors available upon request)

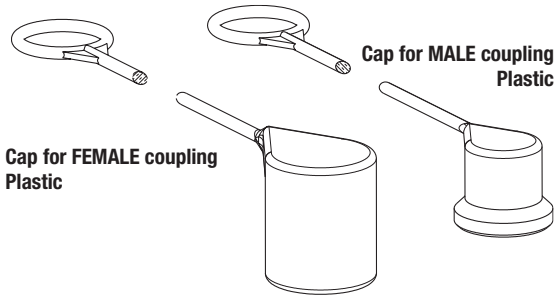

Protective Cap					
Body Size	Port size	Description	Part number		Material/Color
			Cap for Female	Cap for Male	
1/8"	1/8"	A4	-	815100021	Plastic/Red
1/4"	1/4"	A7	815100000	815100023	Plastic/Red
3/8"	3/8"	A9	815100002	815100025	Plastic/Red
3/8"	1/2"	A9	815100002	815100027	Plastic/Red
1/2"	1/2"	A13	815100004	815100029	Plastic/Red
1/2"	3/4"	A13	815100006	815100031	Plastic/Red
5/8"	3/4"	A15	815100008	815100011	Plastic/Red
5/8"	1"	A15	815100008	815100011	Plastic/Red
3/4"	3/4"	A17	815100010	815100013	Plastic/Red
3/4"	1"	A17	815100010	815100013	Plastic/Red
1"	3/4"	A21	815100012	815100015	Plastic/Red
1"	1"	A21	815100012	815100015	Plastic/Red
1"	1-1/4"	A21	815100012	815100015	Plastic/Red

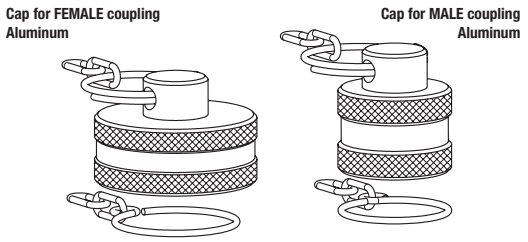

Protective Cap				
Body Size/Description		Part Number		Material/Color
		Cap for Female	Cap for Male	
1/4”	A7	816005002	816005003	Aluminum/Natural
3/8”	A9	816005004	816005005	Aluminum/Natural
1/2”	A13	816005006	816005007	Aluminum/Natural
5/8"	A15	816005008	816005009	Aluminum/Natural
3/4”	A17	816005010	816005011	Aluminum/Natural
1”	A21	816005012	816005013	Aluminum/Natural
1 1/4”	A25	815205020	815205021	Aluminum/Natural
1 1/2”	A30	815105014	815105017	Aluminum/Natural

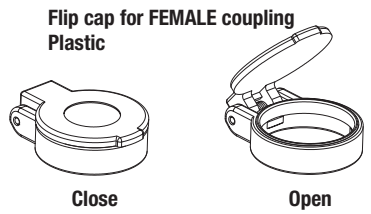

Protective Cap			
Body Size/Description		Part Number	Material/Color
		Cap for Female	
3/8”	F A9	815200002	Plastic/Red
1/2”	F A13	815200004	Plastic/Red
5/8”	F A15	815200006	Plastic/Red
3/4”	F A17	815200008	Plastic/Red

STUCCHI Quick Couplings Catalog - December 2024 - All right reserved.
Texts, data and illustrations mentioned in this catalogue may be changed by Stucchi at any time, without notice; always refer to the version uploaded on the English version of stucchigroup.com/en website for the latest release. In case of doubt, please contact Stucchi technical service.

APMSERIES

INTERCHANGE > **ISO 16028 - NFPA T3.20.15 - HTMA (size 3/8")**

Stucchi®

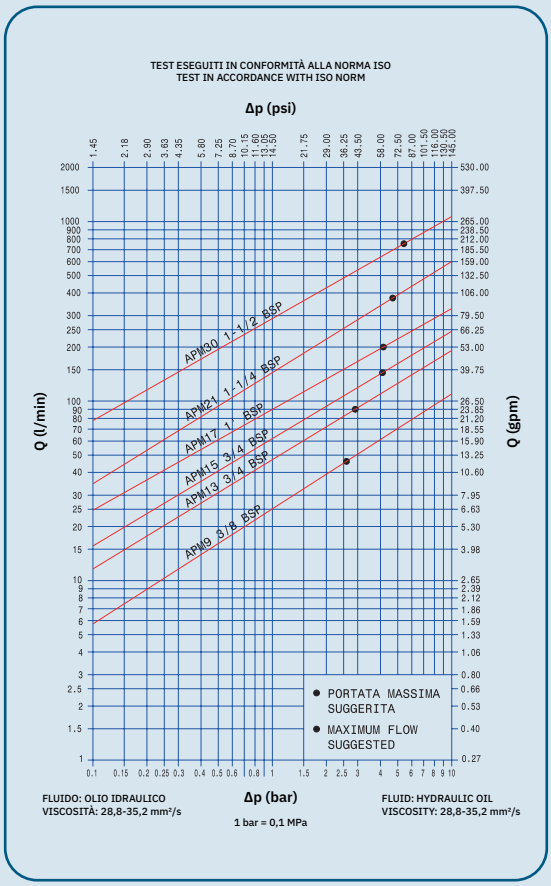

TECHNICAL FEATURES AND OPTIONS

Interchange
ISO 16028
NFPA T3.20.15
HTMA (size 3/8")

Sealing description
Nitrile NBR

Connection system
Push

Available sizes
From 3/8"
to 1-1/2"

Material /treatment
Carbon steel
/Cr3

Available threads
BSP - NPT - SAE

Operating pressure
Up to 350 bar

Locking mechanism
Locking ball+
Safety Lock
(on female coupling)

Flow rate
Up to 750 l/min

Temperature (°C)
-20°C / +100°C

Valving style
Flat Face

Connection under pressure
Connection: Male side only
(see Benefits).
Disconnection: Not allowed.

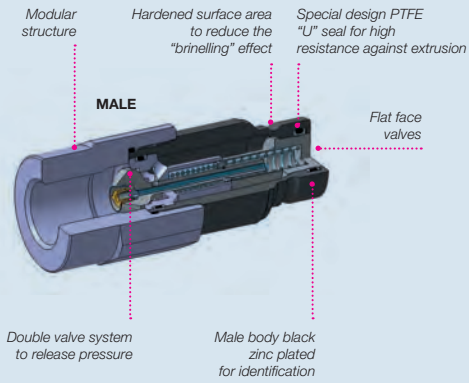

BENEFITS

- Easy connection with male side under residual pressure (female side to drain) thanks to the internal valve.
- Flat face is easy to clean, reducing the inclusion of contamination inside the hydraulic circuit.
- Minimal fluid spillage during disconnection, reducing fluid spillage to the environment.
- Minimal air inclusion during connection.
- Internal valve design creates minimal pressure drop, maintaining circuit efficiency in the system.
- Male body black zinc plated for identification
- The modular design allows flexibility with a wide range of configurations.
- Good resistance to pressure impulses.
- Compact slim design.
- Safe and simple to use.

HOW TO USE

- Before to connect, clean the mating surface of the couplings to avoid dirt inclusion in the circuit.
- To connect push the male half towards the female half or vice versa.
- After connection turn the external sleeve to engage safety lock function, to prevent accidental disconnection.
- To disconnect turn the external sleeve until the sleeve lock notch match the safety lock ball and push back the sleeve.

MAIN APPLICATIONS

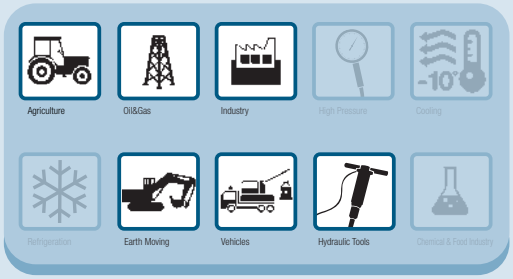

APMSERIES

Stucchi®

PERFORMANCES

Size		Series/Size	Max. flow suggested		Connect force		Disconnect force		Spillage*
in	mm (ISO)		l/min	gpm	N	lbf	N	lbf	ml
3/8	10,0	APM9	46	12,19	165	37,13	40	9,00	0,02
1/2	12,5	APM13	90	23,85	190	42,75	70	15,75	0,01
5/8	16,0	APM15	148	39,22	160	36,00	50	11,25	0,03
3/4	19,0	APM17	200	53,00	260	58,50	80	18,00	0,18
1	25,0	APM21	378	100,17	300	67,50	90	20,25	0,18
1 1/2	38,0	APM30	750	198,75	440	99,00	80	18,00	0,40

Size	Series/Size	Max. operating pressure				Burst pressure			
		Coupled		Male		Coupled		Male	
		MPa	psi	MPa	psi	MPa	psi	MPa	psi
3/8	APM9	35	5075	35	5075	100	14500	120	17400
1/2	APM13	33	4785	33	4785	100	14500	120	17400
5/8	APM15	33	4785	33	4785	100	14500	120	17400
3/4	APM17	33	4785	33	4785	100	14500	120	17400
1	APM21	30	4350	30	4350	80	11600	100	14500
1 1/2	APM30	27	3915	27	3915	80	11600	100	14500

* Spillage is an indicative value of the fluid loss during disconnection (according to ISO norm test method).

Theoretical calculation of connect force with residual pressure:
Fp (N) = Fi + (Pm x 5)
Fi = Connection force without residual pressure (N)
Pm = Residual pressure in the male coupling (MPa)

EXAMPLE
To connect the male coupling APM13 with 20 Mpa of residual pressure, it is necessary the following force:
Fp = Fi + (Pm x 5) = 190 + (20 x 5) = 290 N

Different possible configurations:
Different threads available upon request.

Temperature range:
Seals in NBR (Nitrile): from -20 °C to +100 °C (from -4 °F to +212 °F)
Please read carefully Instructions and warnings for proper selection of the products.

Tests performed:
Tested with female couplings "A" series.
Qualification tests have been performed with hydraulic oil using couplings with NBR (Nitrile) seals.
The max. operating pressure have been verified for 100.000 impulses according to ISO norm test method.

WARNING

A defect, a wrong choice or an improper use of products, can cause injury to persons, animals and objects.
Connect under pressure products are suitable to be connected under residual (static) pressure.
Never connect or disconnect with dynamic pressure (e.g. pump on).
Connection with residual pressure (pressure trapped in the circuit) allowed with female to drain.
Do not use the male coupling disconnected with high impulse pressure.
Do not couple-uncouple with flow in the circuit.
Do not couple-uncouple when the temperature inside of the circuit is higher than 80 °C (176 °F).
Check the maximum allowable working pressure of the port in use.
It is important to limit contamination in the circuit to avoid compromising the function of the internal valves.
Make sure that the medium used is compatible with seal and material as indicated for each series.
In case of doubt please contact Stucchi Technical Support.
The interchangeability is mentioned under the assumption that the manufacturer of the considered products has not changed any dimension.
It is mandatory to carefully read and closely follow the instructions before selecting or using any Stucchi products.
Always refer to the version uploaded in the Instructions and warning section of stucchigroup.com website for the latest release.
For specific, product-related, instructions, please contact Stucchi technical service.

APMSERIES

Stucchi®

FEMALE Standard female for dimensions please refer to "A" series

MALE

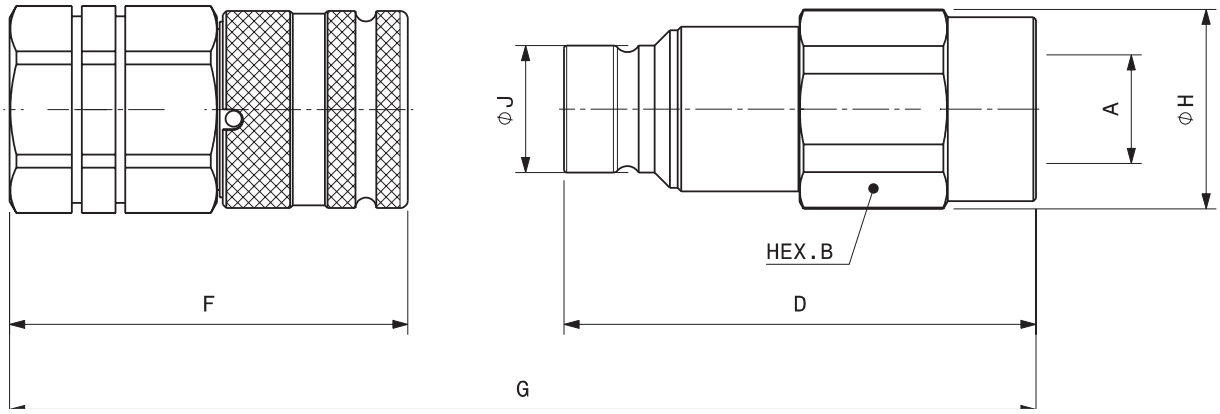

Port description: FEMALE THREAD BSPP (ISO 1179-1)

BODY SIZE	Descriptive Code	Item Code		ISO DN	PORT (A)	Overall Length mm		Overall Length in		Length mm		Length in		Hex mm		Hex in		Diameter mm		Diameter in		Diameter mm		Diameter in		Weight kg		Weight lb
3/8"	M APM9 3/8 BSP	Male	805200001	10,0	3/8"	G	(F+D)-16	(F+D)-0,630	D	80,0	3,15	B	27,0	1,06	H	29,0	1,14	J	19,7	0,78	0,20	0,43
3/8"	M APM9 1/2 BSP	Male	805200003	10,0	1/2"	G	(F+D)-16	(F+D)-0,630	D	82,5	3,25	B	27,0	1,06	H	29,0	1,14	J	19,7	0,78	0,20	0,43
1/2"	M APM13 1/2 BSP	Male	805200005	12,5	1/2"	G	(F+D)-17,3	(F+D)-0,681	D	91,0	3,58	B	36,0	1,42	H	38,5	1,14	J	24,5	0,96	0,41	0,90
1/2"	M APM13 3/4 BSP	Male	805200007	12,5	3/4"	G	(F+D)-17,3	(F+D)-0,681	D	93,5	3,68	B	36,0	1,42	H	38,5	1,52	J	24,5	0,96	0,40	0,89
5/8"	M APM15 3/4 BSP	Male	805200009	16,0	3/4"	G	(F+D)-17,6	(F+D)-0,693	D	95,0	3,74	B	36,0	1,42	H	38,5	1,52	J	27,0	1,06	0,43	0,94
3/4"	M APM17 1 BSP	Male	805200011	19,0	1"	G	(F+D)-22	(F+D)-0,866	D	108,5	4,27	B	46,0	1,81	H	49,8	1,96	J	30,0	1,18	0,75	1,65
1"	M APM21 1-1/4 BSP	Male	805200017	25,0	1 1/4"	G	(F+D)-23	(F+D)-0,906	D	123,5	4,86	B	55,0	2,17	H	59,8	2,35	J	36,0	1,42	1,16	2,56
1-1/2"	M APM30 1-1/2 BSP	Male	805200015	38,0	1 1/2"	G	(F+D)-28,6	(F+D)-1,126	D	146,9	5,78	B	70,0	2,76	H	75,8	2,98	J	57,0	2,24	2,58	5,69

Port description: FEMALE THREAD NPT (ANSI B.1.20.1)

BODY SIZE	Descriptive Code	Item Code		ISO DN	PORT (A)	Overall Length mm		Overall Length in		Length mm		Length in		Hex mm		Hex in		Diameter mm		Diameter in		Diameter mm		Diameter in		Weight kg		Weight lb
3/8"	M APM9 3/8 NPT	Male	805201001	10,0	3/8"	G	(F+D)-16	(F+D)-0,630	D	80,0	3,15	B	27,0	1,06	H	29,0	1,14	J	19,7	0,78	0,21	0,46
3/8"	M APM9 1/2 NPT	Male	805201003	10,0	1/2"	G	(F+D)-16	(F+D)-0,630	D	82,5	3,25	B	27,0	1,06	H	29,0	1,14	J	19,7	0,78	0,21	0,45
1/2"	M APM13 1/2 NPT	Male	805201005	12,5	1/2"	G	(F+D)-17,3	(F+D)-0,681	D	91,0	3,58	B	36,0	1,42	H	38,5	1,14	J	24,5	0,96	0,43	0,95
1/2"	M APM13 3/4 NPT	Male	805201007	12,5	3/4"	G	(F+D)-17,3	(F+D)-0,681	D	93,5	3,68	B	36,0	1,42	H	38,5	1,52	J	24,5	0,96	0,42	0,91
5/8"	M APM15 3/4 NPT	Male	805201009	16,0	3/4"	G	(F+D)-17,6	(F+D)-0,693	D	95,0	3,74	B	36,0	1,42	H	38,5	1,52	J	27,0	1,06	0,44	0,96
3/4"	M APM17 1 NPT	Male	805201011	19,0	1"	G	(F+D)-22	(F+D)-0,866	D	108,5	4,27	B	46,0	1,81	H	49,8	1,96	J	30,0	1,18	0,76	1,68
1"	M APM21 1-1/4 NPT	Male	805201017	25,0	1 1/4"	G	(F+D)-23	(F+D)-0,906	D	123,5	4,86	B	55,0	2,17	H	59,8	2,35	J	36,0	1,42	1,20	2,65
1-1/2"	M APM30 1-1/2 NPT	Male	805201015	38,0	1 1/2"	G	(F+D)-28,6	(F+D)-1,126	D	146,9	5,78	B	70,0	2,76	H	75,8	2,98	J	57,0	2,24	2,60	5,72

Port description: FEMALE THREAD SAE (ISO 11926-1 & SAE J1926-1)

BODY SIZE	Descriptive Code	Item Code		ISO DN	PORT (A)	Overall Length mm		Overall Length in		Length mm		Length in		Hex mm		Hex in		Diameter mm		Diameter in		Diameter mm		Diameter in		Weight kg		Weight lb
3/8"	M APM9 1/2 SAE	Male	805204001	10,0	3/4-16UNF	G	(F+D)-16	(F+D)-0,630	D	82,5	3,25	B	27,0	1,06	H	29,0	1,14	J	19,7	0,78	0,21	0,45
1/2"	M APM13 5/8 SAE	Male	805204003	12,5	7/8-14UNF	G	(F+D)-17,3	(F+D)-0,681	D	91,0	3,58	B	36,0	1,42	H	38,5	1,14	J	24,5	0,96	0,41	0,91
1/2"	M APM13 3/4 SAE	Male	805204005	12,5	1-1/16-12UN	G	(F+D)-17,3	(F+D)-0,681	D	93,5	3,68	B	36,0	1,42	H	38,5	1,52	J	24,5	0,96	0,40	0,88
5/8"	M APM15 3/4 SAE	Male	805204007	16,0	1-1/16-12UN	G	(F+D)-17,6	(F+D)-0,693	D	95,0	3,74	B	36,0	1,42	H	38,5	1,52	J	27,0	1,06	0,43	0,94
3/4"	M APM17 1 SAE	Male	805204009	19,0	1-5/16-12UN	G	(F+D)-22	(F+D)-0,866	D	108,5	4,27	B	46,0	1,81	H	49,8	1,96	J	30,0	1,18	0,76	1,66
1"	M APM21 1-1/4 SAE	Male	805204017	25,0	1-5/8-12UN	G	(F+D)-23	(F+D)-0,906	D	123,5	4,86	B	55,0	2,17	H	59,8	2,35	J	36,0	1,42	1,19	2,61
1-1/2"	M APM30 1-1/2 SAE	Male	805204015	38,0	1-7/8-12UN	G	(F+D)-28,6	(F+D)-1,126	D	146,9	5,78	B	70,0	2,76	H	75,8	2,98	J	57,0	2,24	2,56	5,64

To calculate G see measure F in the leaflet A series

SPARE KIT SEAL FOR MALE

Repair kit / OR+BK		
Body Size	Description	Part Number
3/8”	M APM9	815700337
1/2”	M APM13	815700339
5/8”	M APM15	815700341
3/4”	M APM17	815700655
1”	M APM21	815700345
1 1/2”	M APM30	815700697*

* OR + O-Ring holder

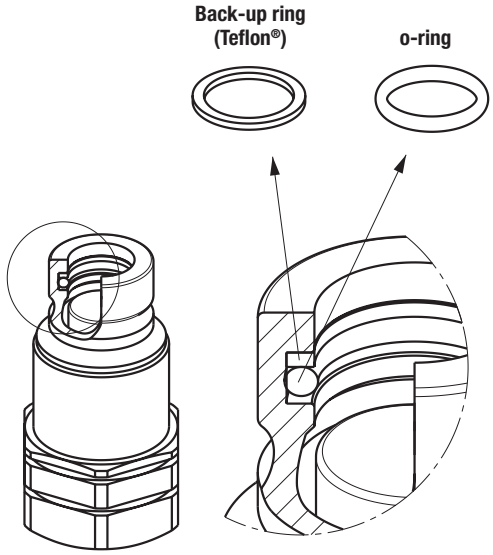

O-Ring in NBR
BackUp in PTFE

PROTECTIVE CAPS FOR APM SERIES

Protective caps are always recommended to protect the couplings from damage, dirt inclusion, and will increase the product life. This is particularly important in mobile applications where exposure to weather and aggregate materials are common.
The protection caps for APM couplings are manufactured in plastic with connection lanyard (standard color red, other colors available upon request).

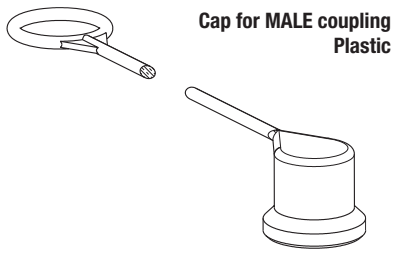

Protective Cap				
Body Size	Port size	Description	Part number Cap for Male	Material/Color
3/8"	3/8"	M APM9	815100025	Plastic/Red
3/8"	1/2"	M APM9	815100027	Plastic/Red
1/2"	1/2"	M APM13	815100029	Plastic/Red
1/2"	3/4"	M APM13	815100031	Plastic/Red
5/8"	3/4"	M APM15	815100011	Plastic/Red
3/4"	1"	M APM17	815100013	Plastic/Red
1"	1-1/4"	M APM21	815100015	Plastic/Red
1-1/2"	1-1/4"	M APM30	815100017	Plastic/Red

STUCCHI Quick Couplings Catalog - December 2024 - All right reserved.
Texts, data and illustrations mentioned in this catalogue may be changed by Stucchi at any time, without notice; always refer to the version uploaded on the English version of stucchigroup.com/en website for the latest release. In case of doubt, please contact Stucchi technical service.

A-HDSERIES

INTERCHANGE > **ISO 16028 - NFPA T3.20.15 - HTMA (size 3/8")**

Stucchi®

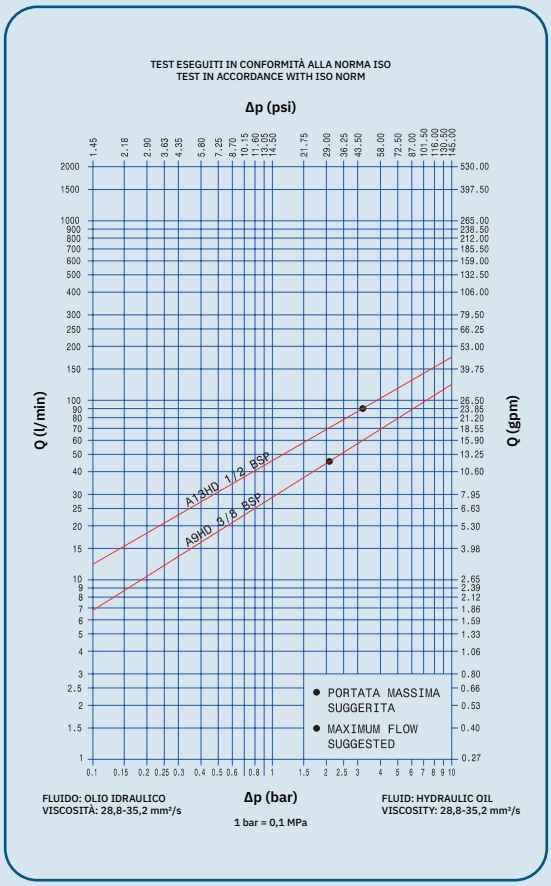

TECHNICAL FEATURES AND OPTIONS

Interchange
ISO 16028
NFPA T3.20.15
HTMA (size 3/8")

Sealing description
Nitrile NBR

Connection system
Push

Available sizes
from 3/8"
to 1/2"

Material /treatment
Carbon steel
/Cr3

Available threads
BSP - NPT - SAE

Operating pressure
Up to 350 bar

Locking mechanism
Locking ball +
Safety Lock

Flow rate
Up to 90 l/min

Temperature (°C)
-20°C / +100°C

Valving style
Flat face

Connection under pressure
Connection: Female side only (see Benefits).
Disconnetion: Not allowed.

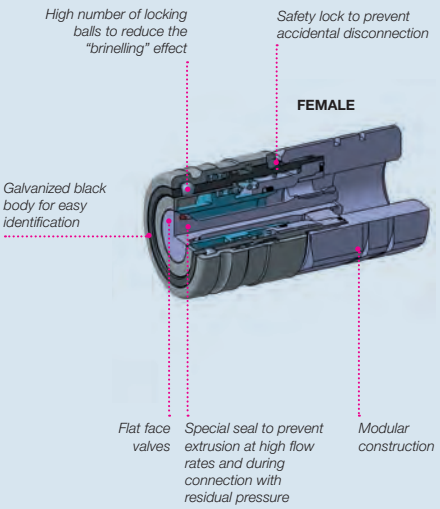

BENEFITS

- Easy connection with female side under residual pressure (male side to drain) thanks to the special Stucchi design.
- Flat face is easy to clean, reducing the inclusion of contamination inside the hydraulic circuit.
- Minimal fluid spillage during disconnection, reducing fluid spillage to the environment.
- Minimal air inclusion during connection.
- Internal valve design creates minimal pressure drop and maintaining circuit efficiency in the system
- The modular design allows flexibility with a wide range of configurations.
- Good resistance to pressure impulses.
- Galvanized black body for easy identification
- Compact slim design.
- Safe and simple to use.

HOW TO USE

- Before to connect, clean the mating surface of the couplings to avoid dirt inclusion in the circuit.
- To connect push the male half towards the female half or vice versa.
- After connection turn the external sleeve to engage safety lock function, to prevent accidental disconnection.
- To disconnect turn the external sleeve until the sleeve lock notch match the safety lock ball and push back the sleeve.

MAIN APPLICATIONS

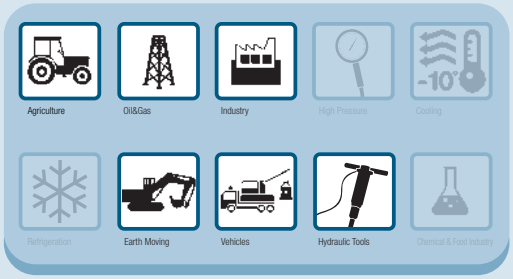

Stucchi®

PERFORMANCES

Size		Series/Size	Max. flow suggested		Connect force		Disconnect force		Spillage*
in	mm (ISO)		l/min	gpm	N	lbf	N	lbf	ml
3/8	10	F -A9HD	46	12,19	190	42,75	30	6,75	0,01
1/2	12,5	F- A13HD	90	23,85	170	38,25	55	12,37	0,02

Size	Series/Size	Max. operating pressure				Burst pressure			
		Coupled		Female		Coupled		Female	
in		MPa	psi	MPa	psi	MPa	psi	MPa	psi
3/8	F- A9HD	35	5075	35	5075	100	14500	100	14500
1/2	F- A13HD	33	4785	33	4785	100	14500	100	14500

* Spillage is an indicative value of the fluid loss during disconnection (according to ISO norm test method).

Theoretical calculation of connect force with residual pressure:
Fp (N) size 3/8” = Fi + (Pf x 44)
Fp (N) size 1/2” = Fi + (Pf x 66)

Fp = Connection force with residual pressure (N)
Fi = Connection force without residual pressure (N)
Pf = Residual pressure in the female coupling (MPa)

EXAMPLE
To connect the female coupling A9HD with 5 Mpa of residual pressure, the following force is necessary:
Fp = Fi + (Pf x 44) = 190 + (5 x 44) = 410 N
This is the maximum force required to open the female valve in order to release pressure.
It is not necessary to apply this force during the entire connection but just for a short stroke (about 1mm).

Different possible configurations:
Zn-Ni treatment is avaiable upon request.
Different threads available upon request.

Temperature range:
Standard seals in NBR, PUR, POM: from -20 °C to +100 °C (from -4 °F to +212 °F).
Please read carefully Instructions and warnings for proper selection of the products.

Tests performed:
Tested with male couplings “A” series
Qualification tests have been performed with hydraulic oil using couplings with NBR (Nitrile) seals.
The max. operating pressure have been verified for 1.000.000 impulses according to ISO norm test method.

WARNING

A defect, a wrong choice or an improper use of products, can cause injury to persons, animals and objects.
Connect under pressure products are suitable to be connected under residual (static) pressure.
Never connect or disconnect with dynamic pressure (e.g. pump on).
Connection with residual pressure (pressure trapped in the circuit) allowed with male to drain (please check the hydraulic circuit).
Do not use the female coupling disconnected with high impulse pressure.
Do not couple-uncouple with flow in the circuit.
Do not couple-uncouple when the temperature inside of the circuit is higher than 80 °C (176 °F).
Check the maximum allowable working pressure of the port in use.
Make sure that the medium used is compatible with seal and material as indicated for each series.
In case of doubt please contact Stucchi Technical Support.
The interchangeability is mentioned under the assumption that the manufacturer of the considered products has not changed any dimension.
It is mandatory to carefully read and closely follow the instructions before selecting or using any Stucchi products.
Always refer to the version uploaded in the Instructions and warning section of stucchigroup.com website for the latest release.
For specific, product-related, instructions, please contact Stucchi technical service.

Stucchi®

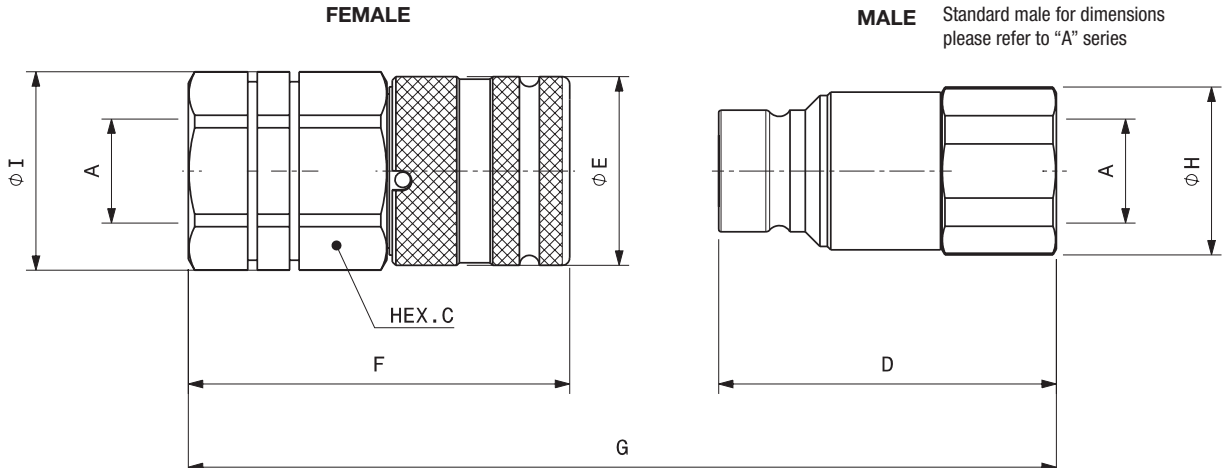

Port description: FEMALE THREAD BSPP (ISO 1179-1)

BODY SIZE	Descriptive Code	Item Code		ISO DN	PORT (A)	Overall Length mm		Overall Length in	Length mm		Length in	Hex mm		Hex in	Diameter mm		Diameter in	Diameter mm		Diameter in	Weight kg	Weight lb
3/8"	F A9HD 3/8 BSP	Female	808300004	10,0	3/8"	G	(F+D)-16	(F+D)-0,630	F	64,8	2,55	C	30,0	1,18	I	32,0	1,26	E	32,0	1,26	0,28	0,62
3/8"	F A9HD 1/2 BSP	Female	808300006	10,0	1/2"	G	(F+D)-16	(F+D)-0,630	F	69,8	2,75	C	30,0	1,18	I	32,0	1,26	E	32,0	1,26	0,29	0,64
1/2"	F A13HD 1/2 BSP	Female	808300008	12,5	1/2"	G	(F+D)-17,3	(F+D)-0,681	F	76,8	3,02	C	36,0	1,42	I	40,0	1,57	E	38,0	1,50	0,47	1,03
1/2"	F A13HD 3/4 BSP	Female	808300010	12,5	3/4"	G	(F+D)-17,3	(F+D)-0,681	F	83,8	3,30	C	36,0	1,42	I	40,0	1,57	E	38,0	1,50	0,48	1,06

Port description: FEMALE THREAD NPT (ANSI B.1.20.1)

BODY SIZE	Descriptive Code	Item Code		ISO DN	PORT (A)	Overall Length mm		Overall Length in	Length mm		Length in	Hex mm		Hex in	Diameter mm		Diameter in	Diameter mm		Diameter in	Weight kg	Weight lb
3/8"	F A9HD 1/2 NPT	Female	808301006	10,0	3/8"	G	(F+D)-16	(F+D)-0,630	F	64,8	2,55	C	30,0	1,18	I	32,0	1,26	E	32,0	1,26	0,31	0,67
1/2"	F A13HD 1/2 NPT	Female	808301008	12,5	1/2"	G	(F+D)-16	(F+D)-0,630	F	76,8	3,02	C	36,0	1,42	I	40,0	1,57	E	38,0	1,50	0,47	1,04
1/2"	F A13HD 3/4 NPT	Female	808301010	12,5	3/4"	G	(F+D)-16	(F+D)-0,630	F	83,8	3,30	C	36,0	1,42	I	40,0	1,57	E	38,0	1,50	0,49	1,07

Port description: FEMALE THREAD SAE (ISO 11926-1 & SAE J1926-1)

BODY SIZE	Descriptive Code	Item Code		ISO DN	PORT (A)	Overall Length mm		Overall Length in	Length mm		Length in	Hex mm		Hex in	Diameter mm		Diameter in	Diameter mm		Diameter in	Weight kg	Weight lb
3/8"	F A9HD 1/2 SAE	Female	808304008 *	10,0	3/4-16 UNF	G	(F+D)-16	(F+D)-0,630	F	69,8	2,75	C	30,0	1,18	I	32,0	1,26	E	32,0	1,26	0,30	0,66
3/8"	F A9HD 5/8 SAE	Female	808304010 *	10,0	7/8-14UNF	G	(F+D)-17,3	(F+D)-0,681	F	71,8	2,83	C	30,0	1,18	I	32,0	1,26	E	32,0	1,26	0,29	0,64
1/2"	F A13HD 1/2 SAE	Female	808304016	12,5	3/4-16UNF	G	(F+D)-17,3	(F+D)-0,681	F	76,8	3,02	C	36,0	1,42	I	40,0	1,57	E	38,0	1,50	0,48	1,05
1/2"	F A13HD 5/8 SAE	Female	808304012	12,5	7/8-14UNF	G	(F+D)-17,6	(F+D)-0,693	F	78,8	3,10	C	36,0	1,42	I	40,0	1,57	E	38,0	1,50	0,47	1,04
1/2"	F A13HD 3/4 SAE	Female	808304014	12,5	1-1/16-12UNF	G	(F+D)-22	(F+D)-0,866	F	83,8	3,30	C	36,0	1,42	I	40,0	1,57	E	38,0	1,50	0,47	1,03

* Available upon request.

Also possible with following male threads:
- SAE
- JIC
- JIC Bulkhead. Locknuts available upon request.

Please check availability by contacting your Stucchi contact.
To calculate G see measure D in the leaflet A series.

Stucchi®

Panel mounting

A-HD Series is available upon request also as panel mounting version.

BC: Snap Ring Solution
Grooves on the female sleeve.

BR: Snap Ring Solution
Grooves on the female adaptor.

BT: Lock Ring Solution
Thread on the female body.

For specific codes, dimensions or any other information, please contact Stucchi Technical Support.

Using the BC and BT versions mounted on the panel, you obtain the breakaway function, avoiding damages of the hydraulic connections in case of strong axial force during unintended disconnection.

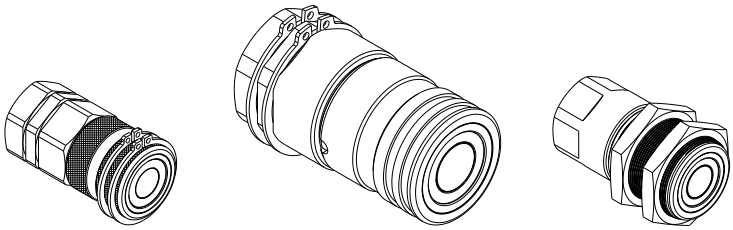

BC **BR** **BT**

SS version

For specific cases, A-HD Series is available upon request without the safety lock ball.

For additional information, please contact Stucchi Technical Support.

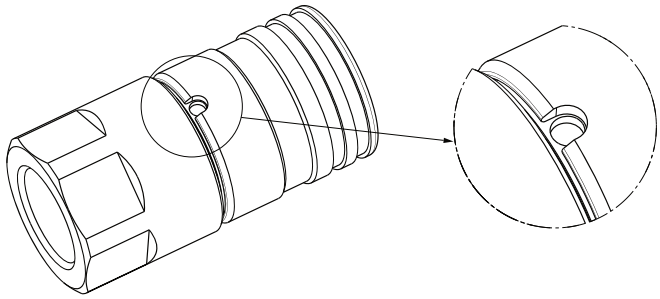

PROTECTIVE CAPS FOR A-HD SERIES

Protective caps are always recommended to protect the couplings from damage, dirt inclusion, and will increase the product life. This is particularly important in mobile applications where exposure to weather and aggregate materials are common.
The protective caps for A-HD couplings are manufactured in two versions:

- Plastic with connection lanyard (standard color red, other colors available upon request).
- Plastic flip caps version (standard color red, other colors available upon request).

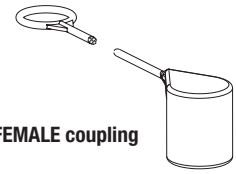

Cap for FEMALE coupling
Plastic

Protective Cap			
Body Size/Description		Part Number Cap for Female	Material/Color
3/8”	F A9HD	815100002	Plastic/Red
1/2”	F A13HD	815100006	Plastic/Red

Flip cap for FEMALE coupling
Plastic

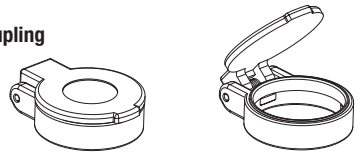

Closed ***Open***

Protective Cap			
Body Size/Description		Part Number Cap for Female	Material/Color
3/8”	A9HD	815200002	Plastic/Red
1/2”	A13HD	815200004	Plastic/Red

STUCCHI Quick Couplings Catalog - December 2024 - All right reserved.
Texts, data and illustrations mentioned in this catalogue may be changed by Stucchi at any time, without notice; always refer to the version uploaded on the English version of stucchigroup.com/en website for the latest release. In case of doubt, please contact Stucchi technical service.

AXSERIES

INTERCHANGE > **ISO 16028 - NFPA T3.20.15 - HTMA (size 3/8")**

Stucchi®

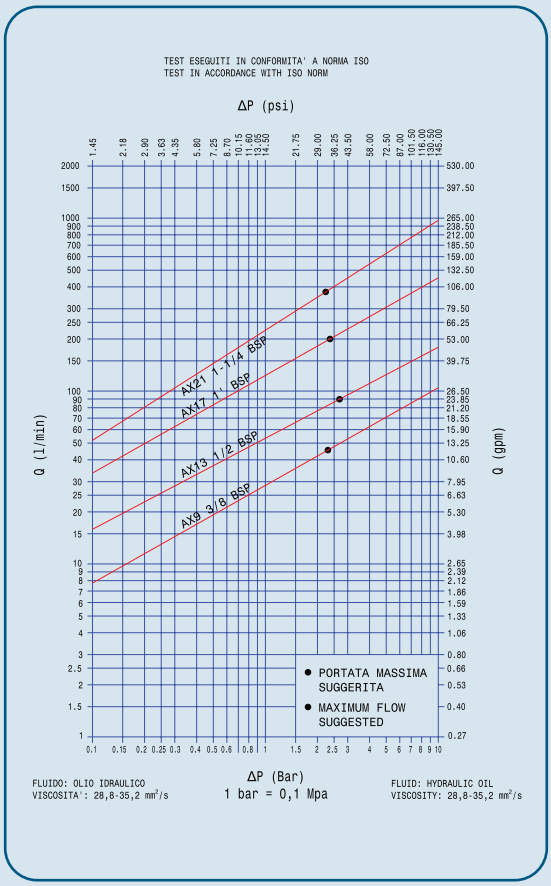

TECHNICAL FEATURES AND OPTIONS

Interchange
ISO 16028
NFPA T3.20.15
HTMA (size 3/8")

Sealing description
FKM (VITON®),
Nitrile NBR

Connection system
Push

Available sizes
from 3/8"
to 1"

Material /treatment
Stainless steel
(AISI 316L)

Available threads
BSP - METRIC

Operating pressure
Up to 350 bar

Locking mechanism
Locking ball +
Safety Lock

Flow rate
Up to 378 l/min

Temperature (°C)
-15°C / +180°C

Valving style
Flat face

Connection under pressure
Connection: not allowed
Disconnection: not allowed

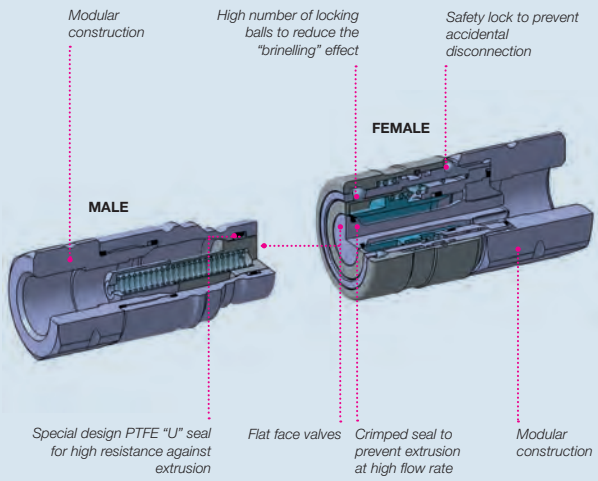

BENEFITS

- Flat face is easy to clean, reducing the inclusion of contamination inside the hydraulic circuit.
- Minimal fluid spillage during disconnection, reducing fluid spillage to the environment.
- Minimal air inclusion during connection.
- Internal valve design creates minimal pressure drop, maintaining circuit efficiency in the system.
- The modular design allows flexibility with a wide range of configurations.
- Optimal corrosion resistance.
- Compact slim design.
- Safe and simple to use.

HOW TO USE

- Before to connect, clean the mating surface of the couplings to avoid dirt inclusion in the circuit.
- To connect push the male half towards the female half or vice versa.
- After connection turn the external sleeve to engage safety lock function, to prevent accidental disconnection.
- To disconnect turn the external sleeve until the sleeve lock notch match the safety lock ball and push back the sleeve.

MAIN APPLICATIONS

Stucchi®

PERFORMANCES

Size		Series/Size	Max. flow suggested		Connect force		Disconnect force		Spillage*
in	mm (ISO)		l/min	gpm	N	lbf	N	lbf	ml
3/8	10	AX9	46	12,19	200	45	45	10,12	0,01
1/2	12,5	AX13	90	23,85	165	37,12	58	13,05	0,02
3/4	19	AX17	200	53	255	57,37	80	18	0,03
1	25	AX21	378	100,17	285	64,12	110	24,75	0,03

Size	Series/Size	Max. operating pressure					
		Coupled		Male		Female	
in		MPa	psi	MPa	psi	MPa	psi
3/8	AX9	35	5075	35	5075	35	5075
1/2	AX13	33	4785	33	4785	33	4785
3/4	AX17	33	4785	33	4785	33	4785
1	AX21	30	4350	30	4350	30	4350

* Spillage is an indicative value of the fluid loss during disconnection (according to ISO norm test method).

Material:
- Construction: Stainless steel AISI 316L
- Springs: AISI 302
- Locking ball: AISI 316

Different possible configurations:
Size AX7 and AX15 upon request.
Different threads available upon request.

Temperature range:
Seals in FKM (VITON®): from -15°C to +180°C (from +5 °F to +356 °F).
Seals in NBR (Nitrile) with water: from +5°C to +60°C (from +41°F to +140°F).
Different seals available upon request.

Tests performed:
Qualification tests have been performed with hydraulic oil using couplings with FKM (VITON®) seals.
The max. operating pressure have been verified for 100.000 impulses according to ISO norm test method.

WARNING

A defect, a wrong choice or an improper use of products, can cause injury to persons, animals and objects.
Never connect or disconnect with dynamic pressure (e.g. pump on).
Do not use the female coupling disconnected with high impulse pressure.
Do not couple-uncouple with flow and/or pressure in the circuit.
Do not couple-uncouple when the temperature inside of the circuit is higher than 80 °C (176 °F).
Do not use with fluids below the freezing point to avoid damages due to ice expansion and consequential extrusion of the valving.
Check the maximum allowable working pressure of the port in use.
Make sure that the medium used is compatible with seal and material as indicated for each series.
In case of doubt please contact Stucchi Technical Support.
The interchangeability is mentioned under the assumption that the manufacturer of the considered products has not changed any dimension.
It is mandatory to carefully read and closely follow the instructions before selecting or using any Stucchi products.
Always refer to the version uploaded in the Instructions and warning section of stucchigroup.com website for the latest release.
For specific, product-related, instructions, please contact Stucchi technical service.

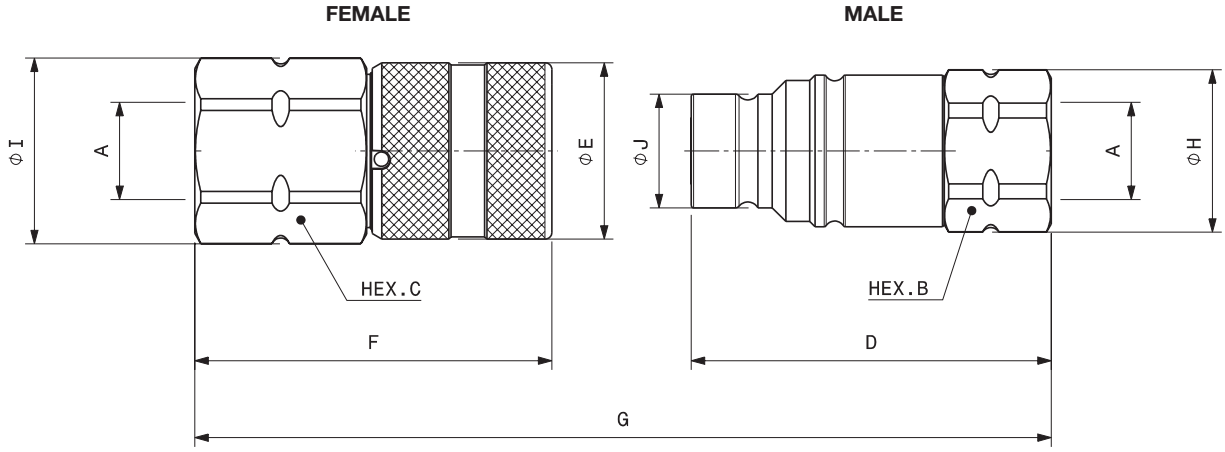

Port description: FEMALE THREAD BSPP (ISO 1179-1)

BODY SIZE	Descriptive Code	Item Code		ISO DN	PORT (A)	Overall Length mm	Overall Length in	Length mm	Length in	Wrench Flat mm	Wrench Flat in	Diameter mm	Diameter in	Diameter mm	Diameter in	Weight kg	Weight lb
3/8"	F AX9 3/8 BSP	Female	808500104	10	3/8"	G 118,8	4,67	F 69,4	2,73	C 30,0	1,18	I 32,0	1,26	E 32,0	1,26	0,30	0,66
	M AX9 3/8 BSP	Male	808500105					D 65,4	2,57	B 27,0	1,06	H 29,0	1,14	J 19,7	0,78	0,16	0,34
1/2"	F AX13 1/2 BSP	Female	808500108	12,5	1/2"	G 137,1	5,40	F 76,9	3,03	C 36,0	1,42	I 40,0	1,57	E 38,0	1,50	0,48	1,05
	M AX13 1/2 BSP	Male	808500109					D 77,5	3,05	B 32,0	1,26	H 35,0	1,38	J 24,5	0,96	0,30	0,66
3/4"	F AX17 3/4 BSP	Female	808500114	19	3/4"	G 167,5	6,59	F 103,8	4,09	C 46,0	1,81	I 49,8	1,96	E 48,0	1,89	1,06	2,33
	M AX17 3/4 BSP	Male	808500115					D 85,7	3,37	B 46,0	1,81	H 49,5	1,95	J 30,0	1,18	0,53	1,16
1"	F AX21 1 BSP	Female	808500118	25	3/4"	G 186,60	7,35	F 107,3	4,22	C 55	2,17	I 59,8	2,35	E 55	2,17	1,51	3,33
	M AX21 1 BSP	Male	808500119					D 102	4,02	B 55	2,17	H 59,8	2,35	J 36	1,42	0,94	2,07

Port description: FEMALE THREAD BSPP (ISO 1179-1) - with Nitrile NBR sealing

BODY SIZE	Descriptive Code	Item Code		ISO DN	PORT (A)	Overall Length mm	Overall Length in	Length mm	Length in	Wrench Flat mm	Wrench Flat in	Diameter mm	Diameter in	Diameter mm	Diameter in	Weight kg	Weight lb
3/8"	F AX9N 3/8 BSP	Female	808500004	10	3/8"	G 133,5	5,26	F 76,6	3,0	C 30	1,18	I 32,0	1,26	E 32,0	1,26	0,30	0,13
	M AX9N 3/8 BSP	Male	808500005					D 72,9	2,9	B 27	1,06	H 29,0	1,14	J 19,7	0,78	0,16	0,07
3/8"	F AX9N 1/2 BSP	Female	808500006	10	1/2"	G 125,7	4,95	F 74,4	2,9	C 30	1,18	I 32,0	1,26	E 32,0	1,26	0,30	0,14
	M AX9N 1/2 BSP	Male	808500007					D 67,4	2,7	B 27	1,06	H 29,0	1,14	J 19,7	0,78	0,16	0,07
1/2"	F AX13N 1/2 BSP	Female	808500008	12,5	1/2"	G 137,2	5,40	F 76,9	3,0	C 36	1,42	I 40,0	1,57	E 38,0	1,50	0,40	0,18
	M AX13N 1/2 BSP	Male	808500009					D 77,6	3,1	B 32	1,26	H 35,0	1,38	J 24,5	0,96	0,30	0,14
1/2"	F AX13N 3/4 BSP	Female	808500010	12,5	3/4"	G 149,1	5,87	F 86,9	3,4	C 36	1,42	I 40,0	1,57	E 38,0	1,50	0,45	0,20
	M AX13N 3/4 BSP	Male	808500011					D 79,5	3,1	B 36	1,42	H 40,0	1,57	J 24,5	0,96	0,35	0,16
3/4"	F AX17N 3/4 BSP	Female	808500014	19	3/4"	G 167,5	6,59	F 103,8	4,1	C 46	1,81	I 49,8	1,96	E 48,0	1,89	1,06	0,48
	M AX17N 3/4 BSP	Male	808500015					D 85,7	3,4	B 46	1,81	H 49,8	1,95	J 30,0	1,18	0,53	0,24
1"	F AX21N 1 BSP	Female	808500018	25	1"	G 186,3	7,33	F 107,3	4,2	C 55	2,17	I 59,8	2,35	E 55,0	2,17	1,50	0,68
	M AX21N 1 BSP	Male	808500019					D 102,0	4,0	B 55	2,17	H 59,8	2,35	J 36,0	1,42	0,82	0,37

Port description: FEMALE THREAD SAE (SAE J1926-1 or ISO 11926-1)

BODY SIZE	Descriptive Code	Item Code		ISO DN	PORT (A)	Overall Length mm	Overall Length in	Length mm	Length in	Wrench Flat mm	Wrench Flat in	Diameter mm	Diameter in	Diameter mm	Diameter in	Weight kg	Weight lb
3/8"	F AX9 3/8 SAE	Female	808504104	10	9/16-18UNF	G 118,8	4,68	F 69,4	2,73	C 30,0	1,18	I 32,0	1,26	E 32,0	1,26	0,30	0,14
	M AX9 3/8 SAE	Male	808504105					D 65,4	2,57	B 27,0	1,06	H 29,0	1,14	J 19,7	0,78	0,16	0,07
3/8"	F AX9 1/2 SAE	Female	808504106	10	3/4-16UNF	G 125,8	4,95	F 74,4	2,93	C 30,0	1,18	I 32,0	1,26	E 32,0	1,26	0,33	0,15
	M AX9 1/2 SAE	Male	808504107					D 67,4	2,65	B 27,0	1,06	H 29,0	1,14	J 19,7	0,78	0,16	0,07
3/4"	F AX17 3/4 SAE	Female	808504114	18	1-1/16-12UN	G 167,3	6,59	F 103,8	4,09	C 46,0	1,81	I 49,8	1,96	E 48,0	1,89	0,08	0,49
	M AX17 3/4 SAE	Male	808504115					D 85,7	3,37	B 46,0	1,81	H 49,5	1,95	J 30,0	1,18	0,54	0,24
3/4"	F AX17 1 SAE	Female	808504120	19	1-5/16-12UN	G 170,3	6,70	F 103,8	4,09	C 46,0	1,81	I 49,8	1,96	E 48,0	1,89	-	-
	M AX17 1 SAE	Male	808504121					D 88,7	3,49	B 46,0	1,81	H 49,5	1,95	J 30,0	1,18	-	-
1"	F AX21 114 SAE	Female	808504122	25	1-5/8-12UN	G 185,8	7,31	F 108,3	4,26	C 55,0	2,17	I 59,8	2,35	E 55,0	2,17	1,42	0,64
	M AX21 114 SAE	Male	808504123					D 100,2	3,94	B 55,0	2,17	H 59,8	2,35	J 36,0	1,42	0,82	0,37

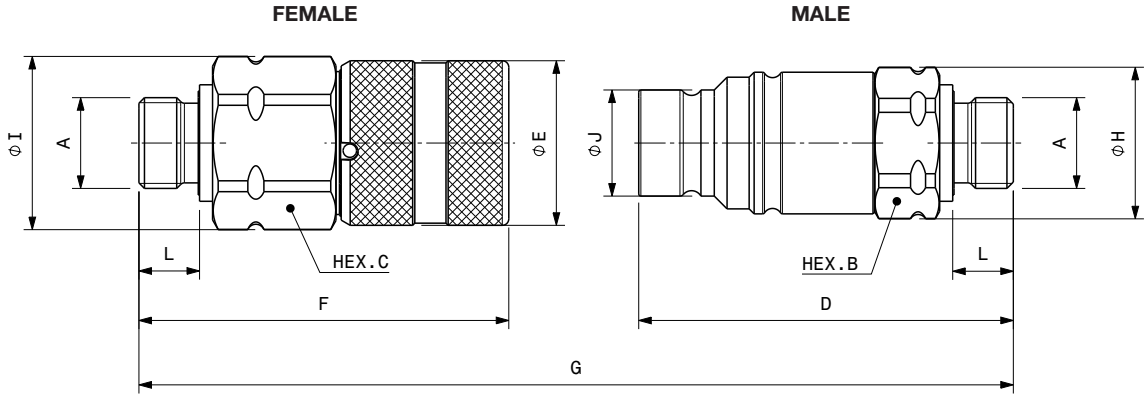

Port description: MALE THREAD BSPP (ISO 1179-2 type E)

BODY SIZE	Descriptive Code	Item Code		ISO DN	PORT (A)	Overall Length			Length			Wrench Flat			Diameter			Diameter			Length			Weight	
							mm	in		mm	in		mm	in		mm	in		mm	in		mm	in	kg	lb
3/8"	F AX9ED 3/8 BSP EXP	Female	808500134	10	3/8"	G	133,5	5,26	F	76,6	3,02	C	30,0	1,18	I	32,0	1,26	E	32,0	1,26	L	13,0	0,51	0,30	0,13
	M AX9ED 3/8 BSP EXT	Male	808500135						D	72,9	2,87	B	27,0	1,06	H	29,0	1,14	J	19,7	0,78		13,0	0,51	0,16	0,07
1/2"	F AX13ED 1/2 BSP EXT	Female	808500136	12,5	1/2"	G	154,6	6,09	F	85,4	3,36	C	36,0	1,42	I	40,0	1,57	E	38,0	1,50	L	14,0	0,55	0,50	0,23
	M AX13ED 1/2 BSP EXT	Male	808500137						D	86,5	3,84	B	32,0	1,26	H	35,0	1,38	J	24,5	0,96		14,5	0,57	0,30	0,14
1"	F AX21ED 1' BSP EST	Female	808500130	25	1"	G	211,0	8,31	F	119,3	4,70	C	55,0	2,17	I	59,8	2,35	E	55,0	2,17	L	18,0	0,71	1,50	0,68
	M AX21ED 1 BSP EXT	Male	808500131						D	114,7	4,52	B	55,0	2,17	H	59,8	2,35	J	36,0	1,42		18,0	0,71	0,82	0,37

Port description: MALE THREAD BSPP (ISO 1179-2 type E) - with Nitrile NBR sealing

BODY SIZE	Descriptive Code	Item Code		ISO DN	PORT (A)	Overall Length			Length			Wrench Flat			Diameter			Diameter			Length			Weight	
							mm	in		mm	in		mm	in		mm	in		mm	in		mm	in	kg	lb
3/8"	F AX9NED 3/8 BSP EXT	Female	808500034	10	3/8"	G	133,5	5,26	F	76,6	3,02	C	30,0	1,18	I	32,0	1,26	E	32,0	1,26	L	13,0	0,51	0,30	0,13
	M AX9NED 3/8 BSP EXT	Male	808500035						D	72,9	2,87	B	27,0	1,06	H	29,0	1,14	J	19,7	0,78		13,0	0,51	0,16	0,07
3/4"	F AX17NED 3/4 BSP EXT	Female	808500032	19	3/4"	G	192,1	7,56	F	112,4	4,43	C	46,0	1,81	I	49,8	1,96	E	48,0	1,89	L	16,5	0,65	1,06	0,48
	M AX17NED 3/4 BSP EXT	Male	808500033						D	101,7	4,00	B	46,0	1,81	H	49,5	1,95	J	30,0	1,18		16,5	0,65	0,53	0,24
1"	F AX21NED 1 BSP EXT	Female	808500030	25	1"	G	212,0	8,35	F	119,3	4,70	C	55,0	2,17	I	59,8	2,35	E	55,0	2,17	L	18,0	0,71	0,95	0,43
	M AX21NED 1 BSP EXT	Male	808500031						D	114,7	4,52	B	55,0	2,17	H	59,8	2,35	J	36,0	1,42		18,0	0,71	0,82	0,37

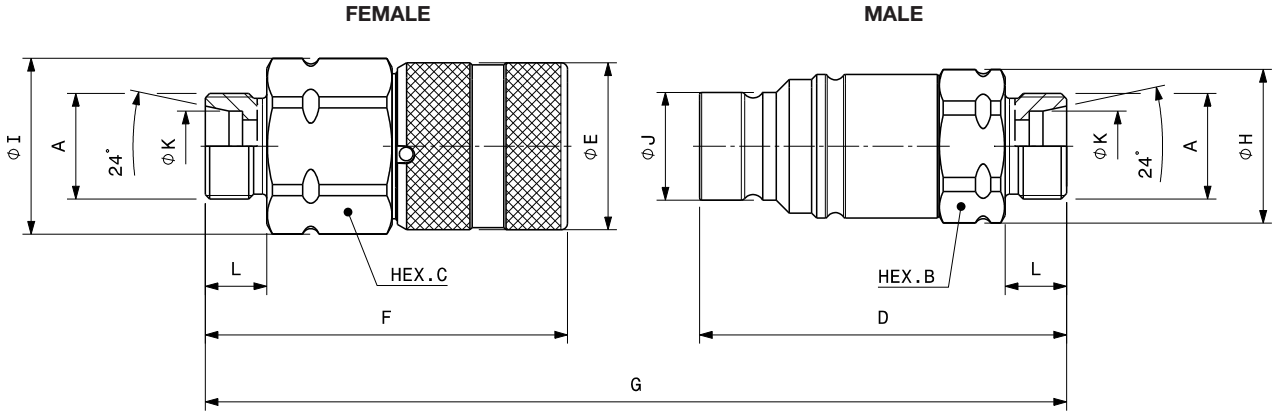

Port description: MALE THREAD METRIC S (ISO 8434-1 & DIN 2353)

BODY SIZE	Descriptive Code	Item Code		ISO DN	PORT (A)	Overall Length mm	Overall Length in	Length mm	Length in	Wrench Flat mm	Wrench Flat in	Diameter mm	Diameter in	Diameter mm	Diameter in	Diameter mm	Diameter in	Length mm	Length in	Weight kg	Weight lb
3/8"	F AX9 S10	Female	808509108	10	M18x1.5	G 128,6	5,06	F 74,2	2,92	C 30,0	1,18	I 32,0	1,26	E 32,0	1,26	K 10,0	0,39	L 12,0	0,47	0,59	1,30
	M AX9 S10	Male	808509109					D 70,4	2,77	C 27,0	1,06	H 29,0	1,14	J 19,7	0,78					0,16	0,34
1/2"	F AX9 S16	Female	808509104	10	M24X1.5	G 132,5	5,22	F 76,1	3,00	C 30,0	1,18	I 32,0	1,26	E 32,0	1,26	K 16,2	0,64	L 14,0	0,55	0,26	0,57
	M AX9 S16	Male	808509105					D 72,4	2,85	C 27,0	1,06	H 29,0	1,14	J 19,7	0,78					0,18	0,40
3/4"	F AX13 S16	Female	808509106	12,5	M24X1.5	G 150,4	5,92	F 82,4	3,24	C 36,0	1,42	I 40,0	1,57	E 38,0	1,50	K 16,2	0,64	L 14,0	0,55	0,30	0,66
	M AX13 S16	Male	808509107					D 85,3	3,36	C 32,0	1,26	H 35,0	1,38	J 30,0	1,18					0,17	0,36
1"	F AX21 S30	Female	808509100	25	M42X4	G 209,0	8,23	F 118,3	4,66	C 55,0	2,17	I 59,8	2,35	E 55,0	2,17	K 30,2	1,19	L 20,0	0,79	1,47	3,23
	M AX21 S30	Male	808509101					D 113,7	4,48	C 55,0	2,17	H 59,8	2,35	J 36,0	1,42					0,89	1,96

Port description: MALE THREAD METRIC S (ISO 8434-1 & DIN 2353) - with Nitrile NBR sealing

BODY SIZE	Descriptive Code	Item Code		ISO DN	PORT (A)	Overall Length mm	Overall Length in	Length mm	Length in	Wrench Flat mm	Wrench Flat in	Diameter mm	Diameter in	Diameter mm	Diameter in	Diameter mm	Diameter in	Length mm	Length in	Weight kg	Weight lb
3/8"	F AX9N S16	Female	808509004	10	M24x1.5	G 132,5	5,22	F 76,1	3,00	C 30,0	1,18	I 32,0	1,26	E 32,0	1,26	K 16,2	0,64	L 14,0	0,55	0,59	1,30
	M AX9N S16	Male	808509005					D 72,4	2,85	C 27,0	1,06	H 29,0	1,14	J 19,7	0,78					0,16	0,34
3/4"	F AX17N S20	Female	808509002	19	M30X2	G 186,1	7,33	F 109,4	4,31	C 46,0	1,81	I 50,0	1,97	E 48,0	1,89	K 20,2	0,80	L 16,0	0,63	1,02	2,24
	M AX17N S20	Male	808509003					D 98,7	3,89	C 46,0	1,81	H 49,5	1,95	J 30,0	1,18					0,53	1,17
1"	F AX21N S30	Female	808509000	25	M42X4	G 209,0	8,23	F 118,3	4,66	C 55,0	2,17	I 59,8	2,35	E 55,0	2,17	K 30,2	1,19	L 20,0	0,79	1,47	3,23
	M AX21N S30	Male	808509001					D 113,7	4,48	C 55,0	2,17	H 59,8	2,35	J 36,0	1,42					0,89	1,96

SPARE KIT SEAL FOR MALE

Repair kit / OR+BK		
Body Size	Description	Part Number
3/8”	M AX9	815700247
1/2”	M AX13	815700249
3/4”	M AX17	815700253
1”	M AX21	815700255

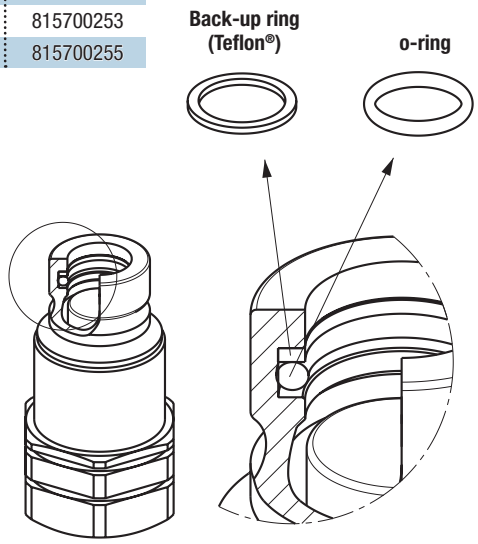

O-Ring in FKM (VITON®)
BackUp in Teflon®

PROTECTIVE CAPS FOR AX SERIES

Protective caps are always recommended to protect the couplings from damage, dirt inclusion, and will increase the product life. This is particularly important in mobile applications where exposure to weather and aggregate materials are common.
The protective caps for AX couplings are manufactured in aluminum with lanyard (colors: natural aluminum).

Cap for FEMALE coupling
Aluminum

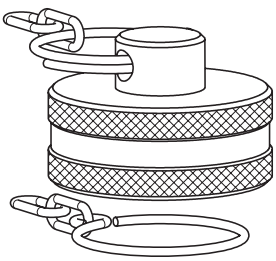

Cap for MALE coupling
Aluminum

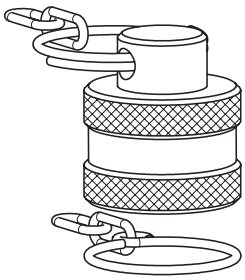

Protective Cap				
Body Size/Description		Part Number		Material/Color
		Cap for Female	Cap for Male	
3/8”	AX9	816005004	816005005	Aluminum/Natural
1/2”	AX13	816005006	816005007	Aluminum/Natural
3/4”	AX17	816005010	816005011	Aluminum/Natural
1”	AX21	816005012	816005013	Aluminum/Natural

The protective caps for AX couplings are also available in plastic (see A series caps at page 49).

STUCCHI Quick Couplings Catalog - December 2024 - All right reserved.
Texts, data and illustrations mentioned in this catalogue may be changed by Stucchi at any time, without notice; always refer to the version uploaded on the English version of stucchigroup.com/en website for the latest release. In case of doubt, please contact Stucchi technical service.

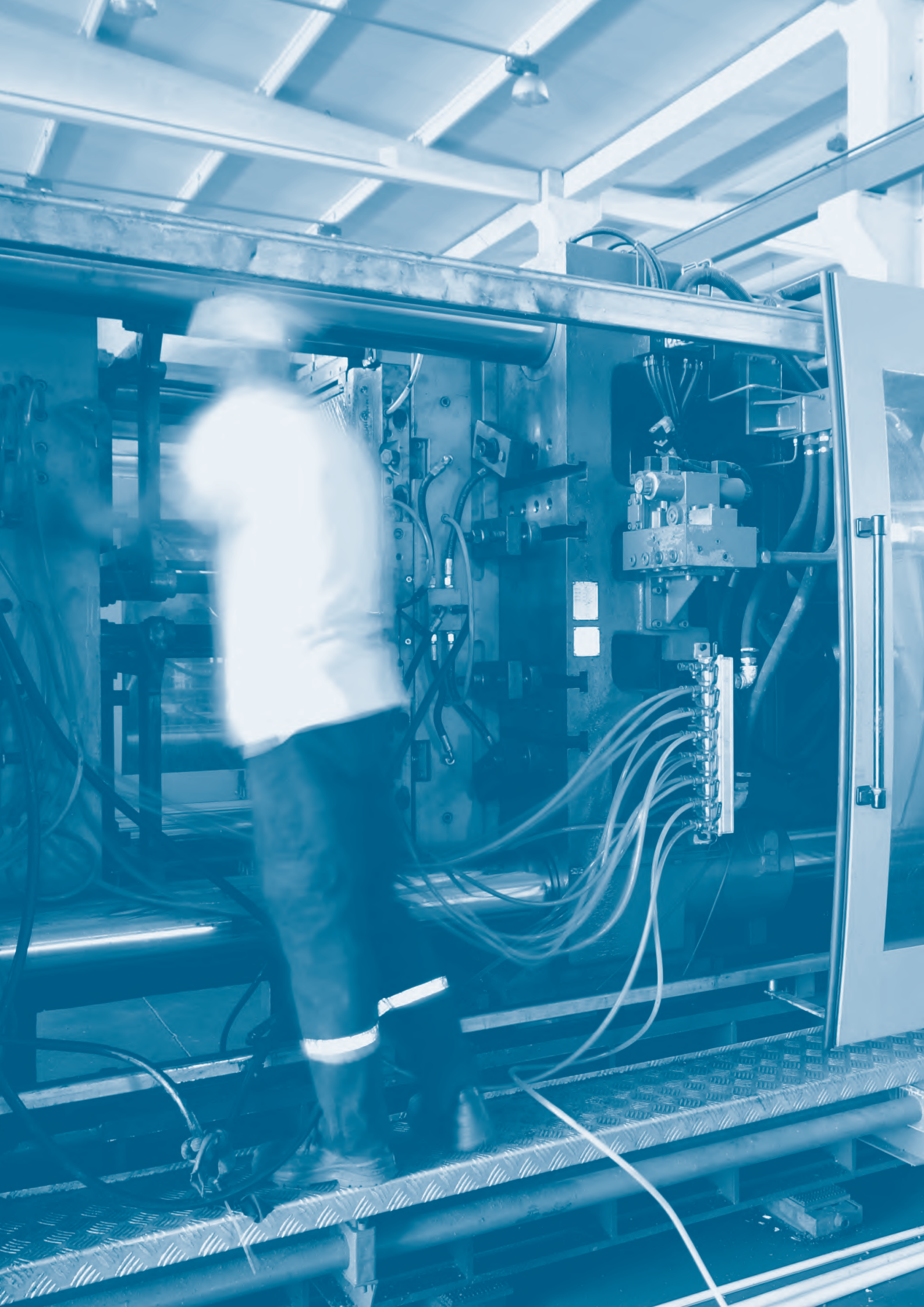

FIRG-QSERIES

INTERCHANGE > **ISO 16028 - NFPA T3.20.15 - HTMA (size 3/8")**

Stucchi®

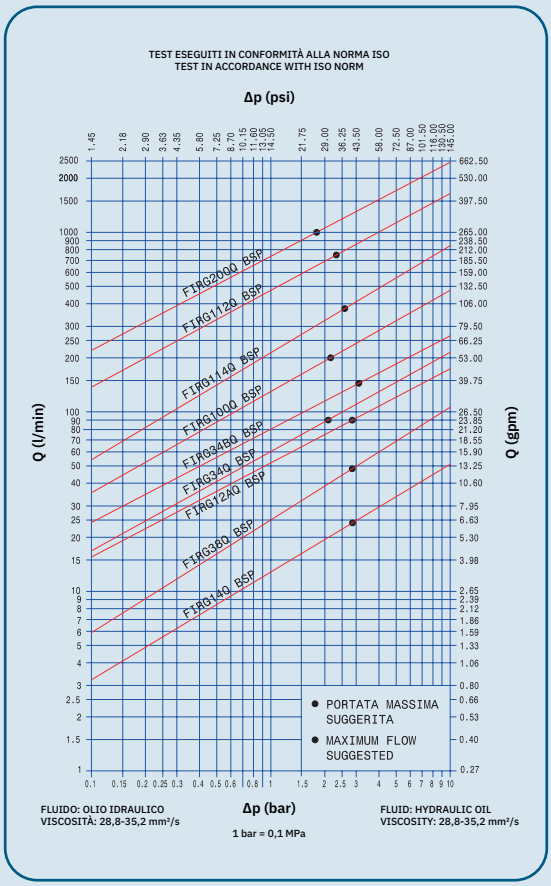

TECHNICAL FEATURES AND OPTIONS

Interchange
ISO 16028
NFPA T3.20.15
HTMA (size 3/8")

Sealing description
Nitrile NBR-FKM (VITON®)-EPDM-KALREZ®

Connection system
Push

Available sizes
from 1/4" to 2"

Material /treatment
Carbon steel+Stainless steel/ QPQ

Available threads
BSP - NPT

Operating pressure
Up to 300 bar

Locking mechanism
Locking ball + Safety Lock

Flow rate
Up to 1000 l/min

Temperature (°C)
different seals with a range of -40°C / +300°C

Valving style
Flat face

Connection under pressure
Connection: not allowed
Disconnection: not allowed

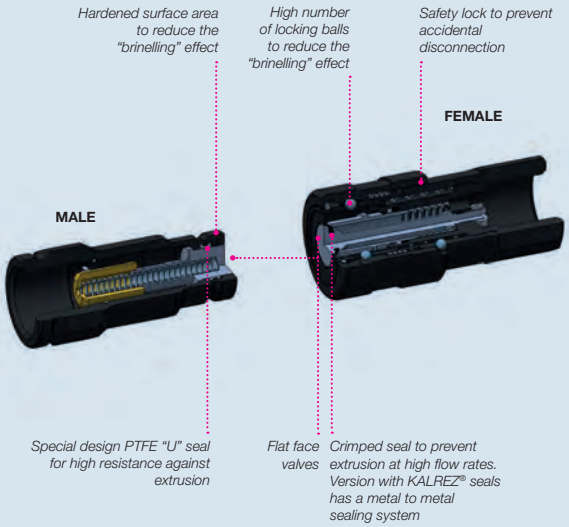

BENEFITS

- Flat face is easy to clean, reducing the inclusion of contamination inside the hydraulic circuit.
- Minimal fluid spillage during disconnection, reducing fluid spillage to the environment.
- Minimal air inclusion during connection.
- Superior corrosion resistance compared to zinc plating in specific corrosive environments.
- External parts in carbon steel with QPQ, valving in AISI303.
- Good resistance to pressure impulses.
- Compact slim design.
- Safe and simple to use.

HOW TO USE

- Before to connect, clean the mating surface of the couplings to avoid dirt inclusion in the circuit.
- To connect push the male half towards the female half or vice versa.
- After connection turn the external sleeve to engage safety lock function, to prevent accidental disconnection.
- To disconnect turn the external sleeve until the sleeve lock notch match the safety lock ball and push back the sleeve.
- Provide an adequate maintenance of the parts (washing with clear water, lubricating and greasing the QPQ surface) to prolongue the life in corrosive environment.

MAIN APPLICATIONS

FIRG-QSERIES

Stucchi®

PERFORMANCES

Size		Series/Size		Max. flow suggested		Connect force		Disconnect force		Spillage*
in	mm (ISO)	OLD	NEW	l/min	gpm	N	lbf	N	lbf	ml
1/4	6,3	FIRG14Q	FIRG7Q	24	6,36	130	29,25	45	10,13	0,01
3/8	10,0	FIRG38Q-12Q	FIRG9Q	46	12,19	160	36,00	35	7,88	0,01
1/2	12,5	FIRG12AQ-34Q	FIRG13Q	90	23,85	240	54,00	65	14,63	0,02
5/8	16,0	FIRG34BQ	FIRG15Q	148	39,22	190	42,75	60	13,50	0,02
3/4	19,0	FIRG100Q	FIRG17Q	200	53,00	220	49,50	70	15,75	0,03
1	25,0	FIRG114Q	FIRG21Q	378	100,17	310	69,75	100	22,50	0,03
1-1/2	38,0	FIRG112Q	FIRG30Q	750	198,75	400	90,00	100	22,50	0,05
2	51,0	FIRG200Q	FIRG45Q	1000	265,00	370	83,25	70	15,75	0,1

Data valid for couplings with NBR, FKM (VITON®), EPDM seals

Size	Series/Size		Max. operating pressure						Burst pressure					
			Coupled		Male		Female		Coupled		Male		Female	
in	OLD	NEW	MPa	psi	MPa	psi	MPa	psi	MPa	psi	MPa	psi	MPa	psi
1/4	FIRG14Q	FIRG7Q	30	4350	30	4350	12	1740	120	17400	120	17400	48	6960
3/8	FIRG38Q-12Q	FIRG9Q	30	4350	30	4350	15	2175	120	17400	120	17400	60	8700
1/2	FIRG12AQ-34Q	FIRG13Q	25	3625	25	3625	12	1740	100	14500	100	14500	48	6960
5/8	FIRG34BQ	FIRG15Q	25	3625	25	3625	12	1740	100	14500	100	14500	48	6960
3/4	FIRG100Q	FIRG17Q	25	3625	25	3625	10	1450	100	14500	90	13050	40	5800
1	FIRG114Q	FIRG21Q	25	3625	25	3625	10	1450	100	14500	90	13050	40	5800
1-1/2	FIRG112Q	FIRG30Q	20	2900	20	2900	8	1160	60	8700	60	8700	32	4640
2	FIRG200Q	FIRG45Q	20	2900	20	2900	8	1160	60	8700	60	8700	32	4640

Data valid for couplings with KALREZ® - SEALS FOR HIGH TEMPERATURE

Size	Series/Size		Max. operating pressure						Burst pressure					
			Coupled		Male		Female		Coupled		Male		Female	
in	OLD	NEW	MPa	psi	MPa	psi	MPa	psi	MPa	psi	MPa	psi	MPa	psi
1/4	FIRG14QK	FIRG7QK	5	725	5	725	5	725	120	17400	120	17400	40	5800
3/8	FIRG38Q-12QK	FIRG9QK	5	725	5	725	5	725	120	17400	120	17400	48	6960
1/2	FIRG12AQ-34QK	FIRG13QK	5	725	5	725	5	725	100	14500	100	14500	48	6960
5/8	FIRG34BQK	FIRG15QK	5	725	5	725	5	725	100	14500	100	14500	40	5800
3/4	FIRG100QK	FIRG17QK	5	725	5	725	5	725	100	14500	90	13050	60	8700
1	FIRG114QK	FIRG21QK	5	725	5	725	5	725	100	14500	90	13050	60	8700
1-1/2	FIRG112QK	FIRG30QK	5	725	5	725	5	725	40	5800	40	5800	32	4640
2	FIRG200QK	FIRG45QK	5	725	5	725	5	725	40	5800	40	5800	32	4640

* Spillage is an indicative value of the fluid loss during disconnection (according to ISO norm test method).

Temperature range:

FIRG QN - NBR (Nitrile) seals: from -20 °C to +100 °C (from -4 °F to +212 °F).
Seals in NBR (Nitrile) with water: from +5°C to +60°C (from +41°F to +140°F).
FIRG QV - FKM (VITON®) seals: from -15°C to +180°C (from +5 °F to +356 °F).
FIRG QE - EPDM (Ethylene Propylene) seals: from -40°C to +150°C (from -40 °F to +302 °F).
FIRG QK - KALREZ® seals: from -25°C to +300°C (from -13 °F to +572 °F).

The couplings with KALREZ® seals for high temperature use can be used at max. operating pressure of 5 Mpa (725 psi).

Please read carefully Instructions and warnings for proper selection of the products.

Tests:

The couplings have been tested at max. operating pressure for 100.000 impulses according to ISO norm test method.

WARNING

A defect, a wrong choice or an improper use of products, can cause injury to persons, animals and objects.
Never connect or disconnect with dynamic pressure (e.g. pump on).
Do not use the female coupling disconnected with high impulse pressure.
Do not couple-uncouple with flow and/or pressure in the circuit.
Do not couple-uncouple when the temperature inside of the circuit is higher than 80 °C (176 °F).
Do not use with fluids below the freezing point to avoid damages due to ice expansion and consequential extrusion of the valving.
Check the maximum allowable working pressure of the port in use.
Make sure that the medium used is compatible with seal and material as indicated for each series.
In case of doubt please contact Stucchi Technical Support.
The interchangeability is mentioned under the assumption that the manufacturer of the considered products has not changed any dimension.
It is mandatory to carefully read and closely follow the instructions before selecting or using any Stucchi products.
Always refer to the version uploaded in the Instructions and warning section of stucchigroup.com website for the latest release.
For specific, product-related, instructions, please contact Stucchi technical service.

FIRG-QSERIES

Stucchi®

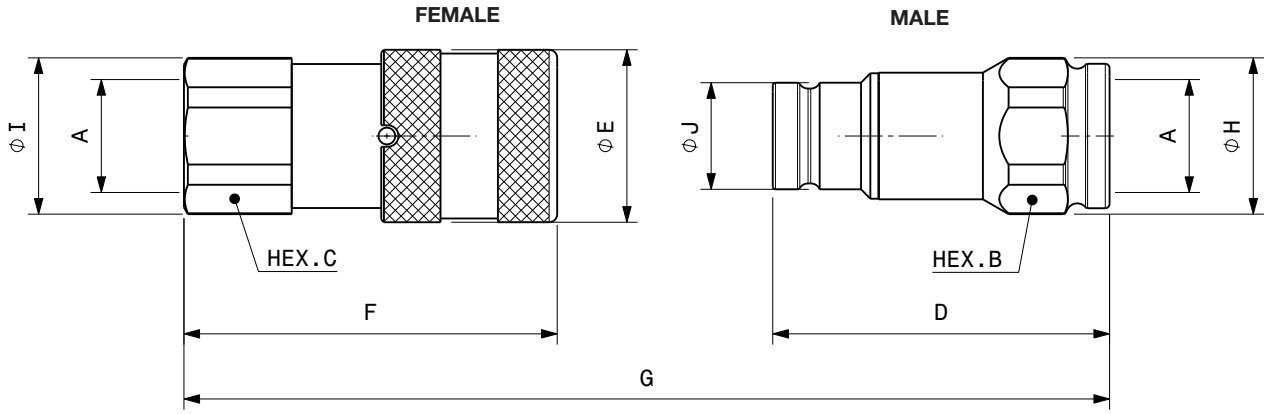

Port description: FEMALE THREAD BSPP (ISO 1179-1)

BODY SIZE	Descriptive Code OLD	Descriptive Code NEW	Item Code*	ISO DN	PORT (A)	Overall Length mm	Overall Length in		Length mm	Length in	Hex mm	Hex in		Diameter mm	Diameter in		Diameter mm	Diameter in	Weight kg	Weight lb
1/4"	F FIRG14Q BSP	F FIRG7Q BSP	Female	6,3	1/4"	G	85,2	3,35	F	48,1	1,89	C	22,0	0,87	I	24,0	0,94	E	28,0	1,10	0,14	0,31
	M FIRG14Q BSP	M FIRG7Q BSP	Male						D	47,9	1,89	B	22,0	0,87	H	23,8	0,94	J	16,0	0,63	0,09	0,19
3/8"	F FIRG38Q BSP	F FIRG9Q BSP	Female	10	3/8"	G	108,7	4,28	F	64,2	2,53	C	27,0	1,06	I	29,0	1,14	E	32,0	1,26	0,23	0,51
	M FIRG38Q BSP	M FIRG9Q BSP	Male						D	60,0	2,36	B	24,0	0,94	H	26,0	1,02	J	19,8	0,78	0,12	0,27
3/8"	F FIRG12Q BSP	F FIRG9Q BSP	Female	10	1/2"	G	116,2	4,57	F	69,2	2,72	C	27,0	1,06	I	29,0	1,14	E	32,0	1,26	0,23	0,51
	M FIRG12Q BSP	M FIRG9Q BSP	Male						D	62,5	2,46	B	27,0	1,06	H	29,0	1,14	J	19,8	0,78	0,12	0,26
1/2"	F FIRG12AQ BSP	F FIRG13Q BSP	Female	12,5	1/2"	G	124,5	4,90	F	73,8	2,91	C	32,0	1,26	I	33,8	1,33	E	38,0	1,50	0,37	0,82
	M FIRG12AQ BSP	M FIRG13Q BSP	Male						D	68,0	2,68	B	32,0	1,26	H	33,8	1,33	J	24,4	0,96	0,23	0,51
1/2"	F FIRG34Q BSP	F FIRG13Q BSP	Female	12,5	3/4"	G	134,0	5,28	F	80,8	3,18	C	36,0	1,42	I	38,5	1,52	E	38,0	1,50	0,37	0,82
	M FIRG34Q BSP	M FIRG13Q BSP	Male						D	70,5	2,78	B	36,0	1,42	H	38,5	1,52	J	24,5	0,96	0,23	0,51
5/8"	F FIRG34BQ BSP	F FIRG15Q BSP	Female	16	3/4"	G	131,4	5,17	F	78,5	3,09	C	36,0	1,42	I	38,5	1,52	E	42,0	1,65	0,47	1,04
	M FIRG34BQ BSP	M FIRG15Q BSP	Male						D	70,5	2,78	B	36,0	1,42	H	38,5	1,52	J	27,0	1,06	0,27	0,59
3/4"	F FIRG100Q BSP	F FIRG17Q BSP	Female	19	1"	G	153,5	6,04	F	93,2	3,67	C	45,0	1,77	I	47,8	1,88	E	48,0	1,89	0,77	1,69
	M FIRG100Q BSP	M FIRG17Q BSP	Male						D	82,3	3,24	B	45,0	1,77	H	47,8	1,88	J	30,0	1,18	0,40	0,87
1"	F FIRG114Q BSP	F FIRG21Q BSP	Female	25	1 1/4"	G	172,8	6,80	F	106,0	4,17	C	55,0	2,17	I	59,8	2,35	E	55,0	2,17	1,20	2,65
	M FIRG114Q BSP	M FIRG21Q BSP	Male						D	89,8	3,54	B	55,0	2,17	H	59,8	2,35	J	36,0	1,42	0,64	1,42
1-1/2"	F FIRG112Q BSP	F FIRG30Q BSP	Female	38	1 1/2"	G	214,8	8,46	F	132,4	5,21	C	65,0	2,56	I	72,0	2,83	E	80,0	3,15	2,82	6,22
	M FIRG112Q BSP	M FIRG30Q BSP	Male						D	111,0	4,37	B	70,0	2,76	H	76,0	2,99	J	57,0	2,24	1,86	4,10
2"	F FIRG200Q BSP	F FIRG45Q BSP	Female	51	2"	G	241,5	9,51	F	156,6	6,17	C	80,0	3,15	I	88,5	3,48	E	100,0	3,94	-	-
	M FIRG200Q BSP	M FIRG45Q BSP	Male						D	123,8	4,87	B	75,0	2,95	H	83,5	3,29	J	73,0	2,87	-	-

* For specific item code see "different seals configurations" page at the end of this section.

Size 1/8" available upon request.

FIRG-QSERIES

Stucchi®

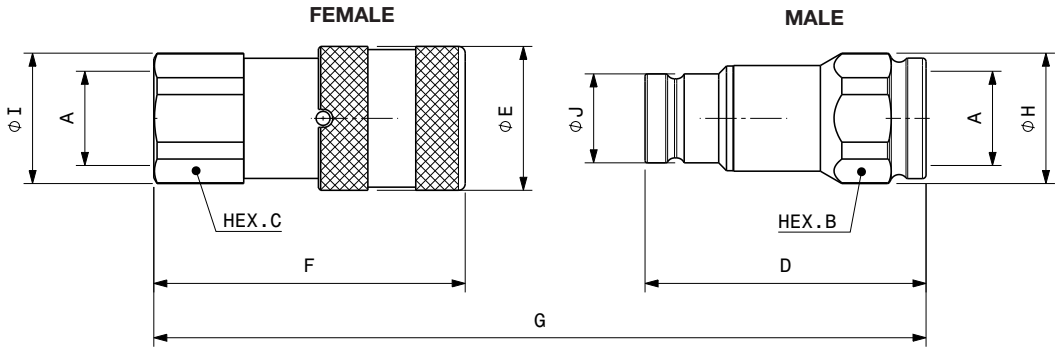

Port description: FEMALE THREAD NPT (ANSI B.1.20.1)

BODY SIZE	Descriptive Code OLD	Descriptive Code NEW	Item Code*	ISO DN	PORT (A)	Overall Length			Length			Hex			Diameter			Diameter			Weight	
							mm	in		mm	in		mm	in		mm	in		mm	in	kg	lb
1/4"	F FIRG14Q NPT	F FIRG7Q NPT	Female	6,3	1/4"	G	85,2	3,35	F	48,1	1,89	C	22,0	0,87	I	24,0	0,94	E	28,0	1,10	0,14	0,30
	M FIRG14Q NPT	M FIRG7Q NPT	Male						D	47,9	1,89	B	22,0	0,87	H	23,8	0,94	J	16,1	0,63	0,09	0,19
3/8"	F FIRG38Q NPT	F FIRG9Q NPT	Female	10	3/8"	G	108,7	4,28	F	64,2	2,53	C	27,0	1,06	I	29,0	1,14	E	32,0	1,26	0,24	0,53
	M FIRG38Q NPT	M FIRG9Q NPT	Male						D	60,0	2,36	B	24,0	0,94	H	26,0	1,02	J	19,7	0,78	0,12	0,26
3/8"	F FIRG12Q NPT	F FIRG9Q NPT	Female	10	1/2"	G	116,2	4,57	F	69,2	2,72	C	27,0	1,06	I	29,0	1,14	E	32,0	1,26	0,24	0,52
	M FIRG12Q NPT	M FIRG9Q NPT	Male						D	62,5	2,46	B	27,0	1,06	H	29,0	1,14	J	19,7	0,78	0,13	0,29
1/2"	F FIRG12AQ NPT	F FIRG13Q NPT	Female	12,5	1/2"	G	124,5	4,90	F	73,8	2,91	C	32,0	1,26	I	33,8	1,33	E	38,0	1,50	0,38	0,85
	M FIRG12AQ NPT	M FIRG13Q NPT	Male						D	68,0	2,68	B	32,0	1,26	H	33,8	1,33	J	24,5	0,96	0,24	0,53
1/2"	F FIRG34Q NPT	F FIRG13Q NPT	Female	12,5	3/4"	G	134,0	5,28	F	80,8	3,18	C	36,0	1,42	I	38,5	1,52	E	38,0	1,50	0,43	0,95
	M FIRG34Q NPT	M FIRG13Q NPT	Male						D	70,5	2,78	B	36,0	1,42	H	38,5	1,52	J	24,5	0,96	0,23	0,50
5/8"	F FIRG34BQ NPT	F FIRG15Q NPT	Female	16	3/4"	G	131,4	5,17	F	78,5	3,09	C	36,0	1,42	I	38,5	1,52	E	42,0	1,65	0,47	1,04
	M FIRG34BQ NPT	M FIRG15Q NPT	Male						D	70,5	2,78	B	36,0	1,42	H	38,5	1,52	J	27,0	1,06	0,27	0,59
3/4"	F FIRG100Q NPT	F FIRG17Q NPT	Female	19	1"	G	153,5	6,04	F	93,2	3,67	C	45,0	1,77	I	47,8	1,88	E	48,0	1,89	0,77	1,69
	M FIRG100Q NPT	M FIRG17Q NPT	Male						D	82,3	3,24	B	45,0	1,77	H	47,8	1,88	J	30,0	1,18	0,41	0,90
1"	F FIRG114Q NPT	F FIRG21Q NPT	Female	25	1 1/4"	G	172,8	6,80	F	106,0	4,17	C	55,0	2,17	I	59,8	2,35	E	55,0	2,17	1,24	2,73
	M FIRG114Q NPT	M FIRG21Q NPT	Male						D	89,8	3,54	B	55,0	2,17	H	59,8	2,35	J	36,0	1,42	0,65	1,42
1-1/2"	F FIRG112Q NPT	F FIRG30Q NPT	Female	38	1 1/2"	G	214,8	8,46	F	132,4	5,21	C	65,0	2,56	I	72,0	2,83	E	80,0	3,15	2,82	6,22
	M FIRG112Q NPT	M FIRG30Q NPT	Male						D	111,0	4,37	B	70,0	2,76	H	76,0	2,99	J	57,0	2,24	1,87	4,11
2"	F FIRG200Q NPT	F FIRG45Q NPT	Female	51	2"	G	241,5	9,51	F	156,6	6,17	C	80,0	3,15	I	88,5	3,48	E	100,0	3,94	-	-
	M FIRG200Q NPT	M FIRG45Q NPT	Male						D	123,8	4,87	B	75,0	2,95	H	83,5	3,29	J	73,0	2,87	-	-

* For specific item code see "different seals configurations" page at the end of this section.

Size 1/8" available upon request.

Panel mounting

FIRG-Q Series is available upon request also as panel mounting version:

BC: Snap Ring Solution
Grooves on the male body and on the female sleeve.

BT: Lock Ring Solution
Thread on the male body and female body.

For specific codes, dimensions or any other information, please contact Stucchi Technical Support.

Using the BC and BT versions mounted on the panel, you obtain the breakaway function, avoiding damages of the hydraulic connections in case of strong axial force during unintended disconnection.

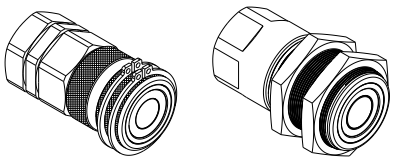

BC **BT**

SS version

For specific cases, FIRG-Q Series is available upon request without the safety lock ball.

For additional information, please contact Stucchi Technical Support.

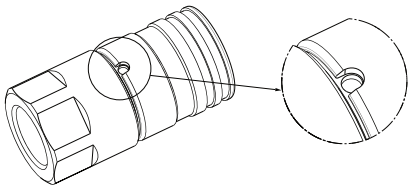

FIRG-QSERIES

Stucchi®

Port description: FEMALE THREAD BSPP (ISO 1179-1)

Different seals configurations

BODY	ISO	PORT (A)	NITRIL SEALS			FKM (VITON®) SEALS			EPDM SEALS			KALREZ® SEALS		
				Descriptive Code			Descriptive Code			Descriptive Code			Descriptive Code	
SIZE	DN		Item Code	OLD	NEW	Item Code	OLD	NEW	Item Code	OLD	NEW	Item Code	OLD	NEW
1/4"	6,3	1/4"	800900000	F FIRG14QN BSP	F FIRG7QN 1/4 BSP	800900100	F FIRG14QV BSP	F FIRG7QV 1/4 BSP	800900200	F FIRG14QE BSP	F FIRG7QE 1/4 BSP	800900704 ◆	F FIRG14QK BSP	F FIRG7QK 1/4 BSP
			800900001	M FIRG14QN BSP	M FIRG7QN 1/4 BSP	800900101	M FIRG14QV BSP	M FIRG7QV 1/4 BSP	800900201	M FIRG14QE BSP	M FIRG7QE 1/4 BSP	800900705 ◆	M FIRG14QK BSP	M FIRG7QK 1/4 BSP
3/8"	10	3/8"	800900002	F FIRG38QN BSP	F FIRG9QN 3/8 BSP	800900102	F FIRG38QV BSP	F FIRG9QV 3/8 BSP	800900202	F FIRG38QE BSP	F FIRG9QE 3/8 BSP	800900708 ◆	F FIRG38QK BSP	F FIRG9QK 3/8 BSP
			800900003	M FIRG38QN BSP	M FIRG9QN 3/8 BSP	800900103	M FIRG38QV BSP	M FIRG9QV 3/8 BSP	800900203	M FIRG38QE BSP	M FIRG9QE 3/8 BSP	800900709 ◆	M FIRG38QK BSP	M FIRG9QK 3/8 BSP
3/8"	10	1/2"	800900004	F FIRG12QN BSP	F FIRG9QN 1/2 BSP	800900104	F FIRG12QV BSP	F FIRG9QV 1/2 BSP	800900204	F FIRG12QE BSP	F FIRG9QE 1/2 BSP	800900710 ◆	F FIRG12QK BSP	F FIRG9QK 1/2 BSP
			800900005	M FIRG12QN BSP	M FIRG9QN 1/2 BSP	800900105	M FIRG12QV BSP	M FIRG9QV 1/2 BSP	800900205	M FIRG12QE BSP	M FIRG9QE 1/2 BSP	800900711 ◆	M FIRG12QK BSP	M FIRG9QK 1/2 BSP
1/2"	12,5	1/2"	800900006	F FIRG12AQN BSP	F FIRG13QN 1/2 BSP	800900106	F FIRG12AQV BSP	F FIRG13QV 1/2 BSP	800900206	F FIRG12AQE BSP	F FIRG13QE 1/2 BSP	800900700 ◆	F FIRG12AQK BSP	F FIRG13QK 1/2 BSP
			800900007	M FIRG12AQN BSP	M FIRG13QN 1/2 BSP	800900107	M FIRG12AQV BSP	M FIRG13QV 1/2 BSP	800900207	M FIRG12AQE BSP	M FIRG13QE 1/2 BSP	800900701 ◆	M FIRG12AQK BSP	M FIRG13QK 1/2 BSP
1/2"	12,5	3/4"	800900008	F FIRG34QN BSP	F FIRG13QN 3/4 BSP	800900108	F FIRG34QV BSP	F FIRG13QV 3/4 BSP	800900208	F FIRG34QE BSP	F FIRG13QE 3/4 BSP	800900712 ◆	F FIRG34QK BSP	F FIRG13QK 3/4 BSP
			800900009	M FIRG34QN BSP	M FIRG13QN 3/4 BSP	800900109	M FIRG34QV BSP	M FIRG13QV 3/4 BSP	800900209	M FIRG34QE BSP	M FIRG13QE 3/4 BSP	800900713 ◆	M FIRG34QK BSP	M FIRG13QK 3/4 BSP
5/8"	16	3/4"	800900010	F FIRG34BQN BSP	F FIRG15QN 3/4 BSP	800900110	F FIRG34BQV BSP	F FIRG15QV 3/4 BSP	800900210	F FIRG34BQE BSP	F FIRG15QE 3/4 BSP	800900716 ◆	F FIRG34BQK BSP	F FIRG15QK 3/4 BSP
			800900011	M FIRG34BQN BSP	M FIRG15QN 3/4 BSP	800900111	M FIRG34BQV BSP	M FIRG15QV 3/4 BSP	800900211	M FIRG34BQE BSP	M FIRG15QE 3/4 BSP	800900717 ◆	M FIRG34BQK BSP	M FIRG15QK 3/4 BSP
3/4"	19	1"	800900012	F FIRG100QN BSP	F FIRG17QN 1 BSP	800900112	F FIRG100QV BSP	F FIRG17QV 1 BSP	800900212	F FIRG100QE BSP	F FIRG17QE 1 BSP	800900702 ◆	F FIRG100QK BSP	F FIRG17QK 1 BSP
			800900013	M FIRG100QN BSP	M FIRG17QN 1 BSP	800900113	M FIRG100QV BSP	M FIRG17QV 1 BSP	800900213	M FIRG100QE BSP	M FIRG17QE 1 BSP	800900703 ◆	M FIRG100QK BSP	M FIRG17QK 1 BSP
1"	25	1-1/4"	800900014	F FIRG114QN BSP	F FIRG21QN 1-1/4 BSP	800900114	F FIRG114QV BSP	F FIRG21QV 1-1/4 BSP	800900214 ◆	F FIRG114QE BSP	F FIRG21QE 1-1/4 BSP	800900706 ◆	F FIRG114QK BSP	F FIRG21QK 1-1/4 BSP
			800900015	M FIRG114QN BSP	M FIRG21QN 1-1/4 BSP	800900115	M FIRG114QV BSP	M FIRG21QV 1-1/4 BSP	800900215 ◆	M FIRG114QE BSP	M FIRG21QE 1-1/4 BSP	800900707 ◆	M FIRG114QK BSP	M FIRG21QK 1-1/4 BSP
1-1/2"	38	1-1/2"	800900016 ◆	F FIRG112QN BSP	F FIRG30QN 1-1/2 BSP	800900116	F FIRG112QV BSP	F FIRG30QV 1-1/2 BSP	800900216 ◆	F FIRG112QE BSP	F FIRG30QE 1-1/2 BSP	800900718 ◆	F FIRG112QK BSP	F FIRG30QK 1-1/2 BSP
			800900017 ◆	M FIRG112QN BSP	M FIRG30QN 1-1/2 BSP	800900117	M FIRG112QV BSP	M FIRG30QV 1-1/2 BSP	800900217 ◆	M FIRG112QE BSP	M FIRG30QE 1-1/2 BSP	800900719 ◆	M FIRG112QK BSP	M FIRG30QK 1-1/2 BSP
2"	51	2"	800900022 ◆	F FIRG200QN BSP	F FIRG45QN 2 BSP	800900120 ◆	F FIRG200QV BSP	F FIRG45QV 2 BSP	800900218 ◆	F FIRG200QE BSP	F FIRG45QE 2 BSP	800900722 ◆	F FIRG200QK BSP	F FIRG45QK 2 BSP
			800900023 ◆	M FIRG200QN BSP	M FIRG45QN 2 BSP	800900121 ◆	M FIRG200QV BSP	M FIRG45QV 2 BSP	800900219 ◆	M FIRG200QE BSP	M FIRG45QE 2 BSP	800900723 ◆	M FIRG200QK BSP	M FIRG45QK 2 BSP

◆ Available upon request.

Port description: FEMALE THREAD NPT (ANSI B.1.20.1)

BODY	ISO	PORT (A)	NITRIL SEALS			FKM (VITON®) SEALS			EPDM SEALS		
				Descriptive Code			Descriptive Code			Descriptive Code	
SIZE	DN		Item Code	OLD	NEW	Item Code	OLD	NEW	Item Code	OLD	NEW
1/4"	6,3	1/4"	800901000	F FIRG14QN NPT	F FIRG7QN 1/4 NPT	800901100	F FIRG14QV NPT	F FIRG7QV 1/4 NPT	800901200 ◆	F FIRG14QE NPT	F FIRG7QE 1/4 NPT
			800901001	M FIRG14QN NPT	M FIRG7QN 1/4 NPT	800901101	M FIRG14QV NPT	M FIRG7QV 1/4 NPT	800901201 ◆	M FIRG14QE NPT	M FIRG7QE 1/4 NPT
3/8"	10	3/8"	800901002	F FIRG38QN NPT	F FIRG9QN 3/8 NPT	800901102	F FIRG38QV NPT	F FIRG9QV 3/8 NPT	800901202	F FIRG38QE NPT	F FIRG9QE 3/8 NPT
			800901003	M FIRG38QN NPT	M FIRG9QN 3/8 NPT	800901103	M FIRG38QV NPT	M FIRG9QV 3/8 NPT	800901203	M FIRG38QE NPT	M FIRG9QE 3/8 NPT
3/8"	10	1/2"	800901004	F FIRG12QN NPT	F FIRG9QN 1/2 NPT	800901104	F FIRG12QV NPT	F FIRG9QV 1/2 NPT	800901204 ◆	F FIRG12QE NPT	F FIRG9QE 1/2 NPT
			800901005	M FIRG12QN NPT	M FIRG9QN 1/2 NPT	800901105	M FIRG12QV NPT	M FIRG9QV 1/2 NPT	800901205 ◆	M FIRG12QE NPT	M FIRG9QE 1/2 NPT
1/2"	12,5	1/2"	800901006	F FIRG12AQN NPT	F FIRG13QN 1/2 NPT	800901106	F FIRG12AQV NPT	F FIRG13QV 1/2 NPT	800901206	F FIRG12AQE NPT	F FIRG13QE 1/2 NPT
			800901007	M FIRG12AQN NPT	M FIRG13QN 1/2 NPT	800901107	M FIRG12AQV NPT	M FIRG13QV 1/2 NPT	800901207	M FIRG12AQE NPT	M FIRG13QE 1/2 NPT
1/2"	12,5	3/4"	800901008	F FIRG34QN NPT	F FIRG13QN 3/4 NPT	800901108 ◆	F FIRG34QV NPT	F FIRG13QV 3/4 NPT	800901208	F FIRG34QE NPT	F FIRG13QE 3/4 NPT
			800901009	M FIRG34QN NPT	M FIRG13QN 3/4 NPT	800901109 ◆	M FIRG34QV NPT	M FIRG13QV 3/4 NPT	800901209	M FIRG34QE NPT	M FIRG13QE 3/4 NPT
5/8"	16	3/4"	800901010	F FIRG34BQN NPT	F FIRG15QN 3/4 NPT	800901110	F FIRG34BQV NPT	F FIRG15QV 3/4 NPT	800901210 ◆	F FIRG34BQE NPT	F FIRG15QE 3/4 NPT
			800901011	M FIRG34BQN NPT	M FIRG15QN 3/4 NPT	800901111	M FIRG34BQV NPT	M FIRG15QV 3/4 NPT	800901211 ◆	M FIRG34BQE NPT	M FIRG15QE 3/4 NPT
3/4"	19	1"	800901012	F FIRG100QN NPT	F FIRG17QN 1 NPT	800901112	F FIRG100QV NPT	F FIRG17QV 1 NPT	800901212 ◆	F FIRG100QE NPT	F FIRG17QE 1 NPT
			800901013	M FIRG100QN NPT	M FIRG17QN 1 NPT	800901113	M FIRG100QV NPT	M FIRG17QV 1 NPT	800901213 ◆	M FIRG100QE NPT	M FIRG17QE 1 NPT
1"	25	1-1/4"	800901014	F FIRG114QN NPT	F FIRG21QN 1-1/4 NPT	800901114	F FIRG114QV NPT	F FIRG21QV 1-1/4 NPT	800901214 ◆	F FIRG114QE NPT	F FIRG21QE 1-1/4 NPT
			800901015	M FIRG114QN NPT	M FIRG21QN 1-1/4 NPT	800901115	M FIRG114QV NPT	M FIRG21QV 1-1/4 NPT	800901215 ◆	M FIRG114QE NPT	M FIRG21QE 1-1/4 NPT
1-1/2"	38	1-1/2"	800901016	F FIRG112QN NPT	F FIRG30QN 1-1/2 NPT	800901116 ◆	F FIRG112QV NPT	F FIRG30QV 1-1/2 NPT	800901216 ◆	F FIRG112QE NPT	F FIRG30QE 1-1/2 NPT
			800901017	M FIRG112QN NPT	M FIRG30QN 1-1/2 NPT	800901117 ◆	M FIRG112QV NPT	M FIRG30QV 1-1/2 NPT	800901217 ◆	M FIRG112QE NPT	M FIRG30QE 1-1/2 NPT
2"	51	2"	800901018 ◆	F FIRG200QN NPT	F FIRG45QN 2 NPT	800901118 ◆	F FIRG200QV NPT	F FIRG45QV 2 NPT			
			800901019 ◆	M FIRG200QN NPT	M FIRG45QN 2 NPT	800901119 ◆	M FIRG200QV NPT	M FIRG45QV 2 NPT			

◆ Available upon request.

FIRG-QSERIES

SPARE KIT SEAL FOR MALE

Repair kit / OR+BK			
Body Size	Description		Part Number
	OLD	NEW	
1/4”	M FIRG14Q	M FIRG7Q	815700519
3/8”	M FIRG38Q-12Q	M FIRG9Q	815700337
1/2”	M FIRG12AQ-34Q	M FIRG13Q	815700339
5/8”	M FIRG34BQ	M FIRG15Q	815700341
3/4”	M FIRG100Q	M FIRG17Q	815700343
1”	M FIRG114Q	M FIRG21Q	815700345
1 1/2”	M FIRG112Q	M FIRG30Q	815700521
2"	M FIRG200Q	M FIRG45Q	815700796

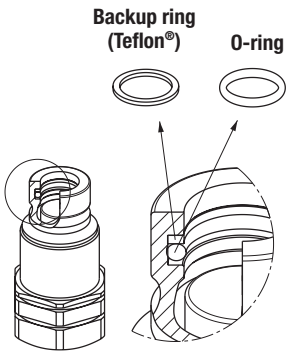

O-Ring in Nitrile
BackUp in Teflon®

PROTECTIVE CAPS FOR FIRG-Q SERIES

Protective caps are always recommended to protect the couplings from damage, dirt inclusion, and will increase the product life.
For the FIRG-Q series are available two kind of materials:

- Plastic caps with lanyard (standard color: red, other colors available upon request)
- aluminum caps with lanyard (standard colors: natural aluminum, other colors available upon request)

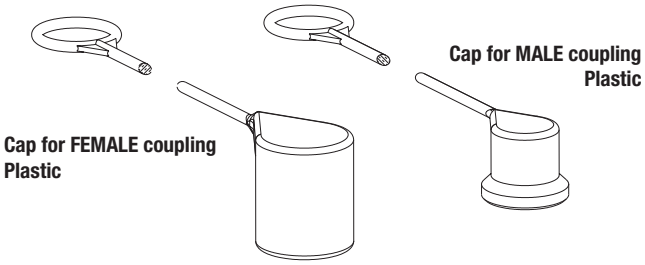

Protective Cap					
Body Size	Description		Part Number		Material/Color
	OLD	NEW	Cap for Female	Cap for Male	
1/4”	FIRG14Q	FIRG7Q	815100000	815100023	Plastic/Red
3/8”	FIRG38Q-12Q	FIRG9Q	815100002	815100027	Plastic/Red
1/2”	FIRG12AQ-34Q	FIRG13Q	815100006	815100031	Plastic/Red
5/8”	FIRG34BQ	FIRG15Q	815100008	815100011	Plastic/Red
3/4”	FIRG100Q	FIRG17Q	815100010	815100013	Plastic/Red
1”	FIRG114Q	FIRG21Q	815100012	815100015	Plastic/Red

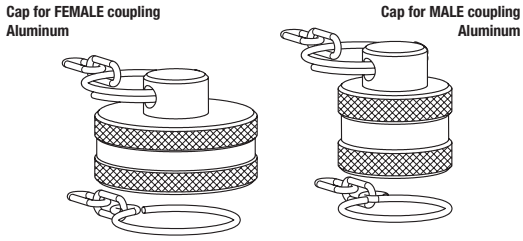

Protective Cap					
Body Size	Description		Part Number		Material/Color
	OLD	NEW	Cap for Female	Cap for Male	
1/4”	FIRG14Q	FIRG7Q	816005002	816005003	Aluminum/Natural
3/8”	FIRG38Q-12Q	FIRG9Q	816005004	816005005	Aluminum/Natural
1/2”	FIRG12AQ-34Q	FIRG13Q	816005006	816005007	Aluminum/Natural
5/8”	FIRG34BQ	FIRG15Q	816005008	816005009	Aluminum/Natural
3/4”	FIRG100Q	FIRG17Q	816005010	816005011	Aluminum/Natural
1”	FIRG114Q	FIRG21Q	816005012	816005013	Aluminum/Natural

STUCCHI Quick Couplings Catalog - December 2024 - All right reserved.
Texts, data and illustrations mentioned in this catalogue may be changed by Stucchi at any time, without notice; always refer to the version uploaded on the English version of stucchigroup.com/en website for the latest release. In case of doubt, please contact Stucchi technical service.

FLSERIES

INTERCHANGE > **ISO 16028 - NFPA T3.20.15 - HTMA (size 3/8")**

Stucchi®

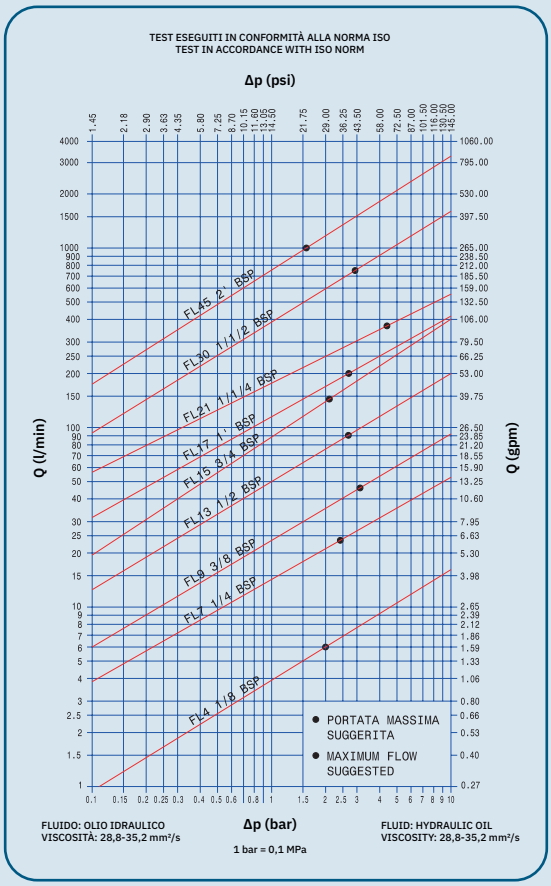

TECHNICAL FEATURES AND OPTIONS

Interchange
ISO 16028
NFPA T3.20.15
HTMA (size 3/8")

Sealing description
FKM (VITON®)

Connection system
Push

Available sizes
from 1/8"
to 2"

Material
Stainless steel
(AISI 316L)

Available threads
BSP - NPT - SAE

Operating pressure
Up to 350 bar

Locking mechanism
Locking ball +
Safety Lock

Flow rate
Up to 1000 l/min

Temperature (°C)
Different seals
with a range of
-40°C / +300°C.

Valving style
Flat face

Connection under pressure
Connection: not allowed
Disconnection: not allowed

BENEFITS

- Flat face is easy to clean, reducing the inclusion of contamination inside the hydraulic circuit.
- Minimal fluid spillage during disconnection, reducing fluid spillage to the environment.
- Minimal air inclusion during connection.
- Optimal resistance to the corrosion for long life of couplings.
- Compact slim design.
- Safe and simple to use.

HOW TO USE

- Before to connect, clean the mating surface of the couplings to avoid dirt inclusion in the circuit.
- To connect push the male half towards the female half or vice versa.
- After connection turn the external sleeve to engage safety lock function, to prevent accidental disconnection.
- To disconnect turn the external sleeve until the sleeve lock notch match the safety lock ball and push back the sleeve.

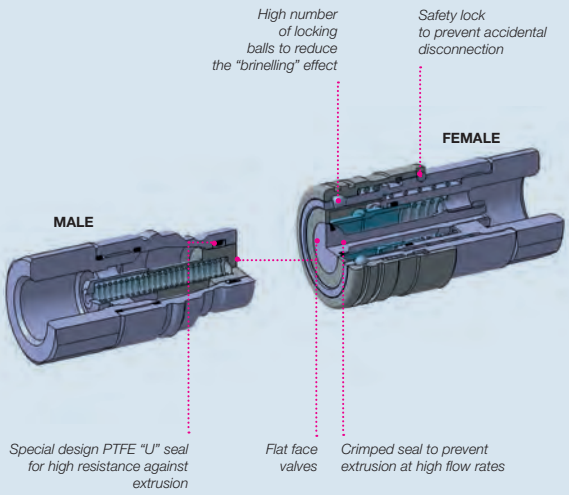

MAIN APPLICATIONS

Stucchi®

PERFORMANCES

Size		Series/Size	Max. flow suggested		Connect force		Disconnect force		Spillage*
in	mm (ISO)		l/min	gpm	N	lbf	N	lbf	ml
1/8		FL4	6	1,59	140	31,50	30	6,75	0,01
1/4	6,3	FL7	24	6,36	160	36,00	45	10,13	0,01
3/8	10,0	FL9	46	12,19	160	36,00	45	10,13	0,01
1/2	12,5	FL13	90	23,85	200	45,00	60	13,50	0,02
5/8	16,0	FL15	148	39,22	200	45,00	60	13,50	0,03
3/4	19,0	FL17	200	53,00	200	45,00	60	13,50	0,03
1	25,0	FL21	378	100,17	280	63,00	90	20,25	0,04
1-1/2	38,0	FL30	750	198,75	580	130,50	160	36,00	0,05
2	51,0	FL45	1000	265,00	490	110,25	70	15,75	0,10

Size	Series/Size	Max. operating pressure						Burst pressure					
		Coupled		Male		Female		Coupled		Male		Female	
in		MPa	psi	MPa	psi	MPa	psi	MPa	psi	MPa	psi	MPa	psi
1/8	FL4	35	5075	35	5075	33	4785	140	20300	140	20300	120	17400
1/4	FL7	35	5075	35	5075	12	1740	140	20300	120	17400	48	6960
3/8	FL9	35	5075	35	5075	15	2175	140	20300	120	17400	60	8700
1/2	FL13	35	5075	35	5075	15	2175	120	17400	110	15950	60	8700
5/8	FL15	35	5075	30	4350	12	1740	120	17400	90	13050	48	6960
3/4	FL17	33	4785	28	4060	12	1740	100	14500	80	11600	48	6960
1	FL21	28	4060	28	4060	12	1740	90	13050	80	11600	48	6960
1-1/2	FL30	23	3335	23	3335	8	1160	80	11600	70	10150	32	4640
2	FL45	15	2175	15	2175	7	1015	60	8700	60	8700	28	4060

* Spillage is an indicative value of the fluid loss during disconnection (according to ISO norm test method).

Material:
- Construction: Stainless steel AISI 316L
- Springs: AISI 302
- Locking ball: AISI 316

Different possible configurations:
Different threads available upon request.
Male PL version, free flow.

Temperature range:
Standard seals in FKM (VITON®): from -15°C to +180°C (from +5 °F to +356 °F).
Upon request seals in NBR (Nitrile): with oil from -20°C to +100°C (from -4°F to +212°F), with water from +5°C to +60°C (from +41°F to +140°F).

Upon request seals in EPDM (Ethylene Propylene) seals: from -40 °C to +150 °C (from -40 °F to +302 °F).
Upon request seals in KALREZ® seals: from -25 °C to +300 °C (from -13 °F to +572 °F).
The couplings with KALREZ® seals for high temperature use can be used at max. operating pressure of 5 Mpa (725 psi).
Please read carefully Instructions and warnings for proper selection of the products.

Tests performed:
Qualification tests have been performed with hydraulic oil using couplings with FKM (VITON®) seals.
The max. operating pressure have been verified for 100.000 impulses according to ISO norm test method.

⚠ WARNING

A defect, a wrong choice or an improper use of products, can cause injury to persons, animals and objects.
Never connect or disconnect with dynamic pressure (e.g. pump on).
Do not use the female coupling disconnected with high impulse pressure.
Do not couple-uncouple with flow and/or pressure in the circuit.
Do not couple-uncouple when the temperature inside of the circuit is higher than 80 °C (176 °F).
Do not use with fluids below the freezing point to avoid damages due to ice expansion and consequential extrusion of the valving.
Check the maximum allowable working pressure of the port in use.
Make sure that the medium used is compatible with seal and material as indicated for each series.
In case of doubt please contact Stucchi Technical Support.
The interchangeability is mentioned under the assumption that the manufacturer of the considered products has not changed any dimension.
It is mandatory to carefully read and closely follow the instructions before selecting or using any Stucchi products.
Always refer to the version uploaded in the Instructions and warning section of stucchigroup.com website for the latest release.
For specific, product-related, instructions, please contact Stucchi technical service.

Stucchi®

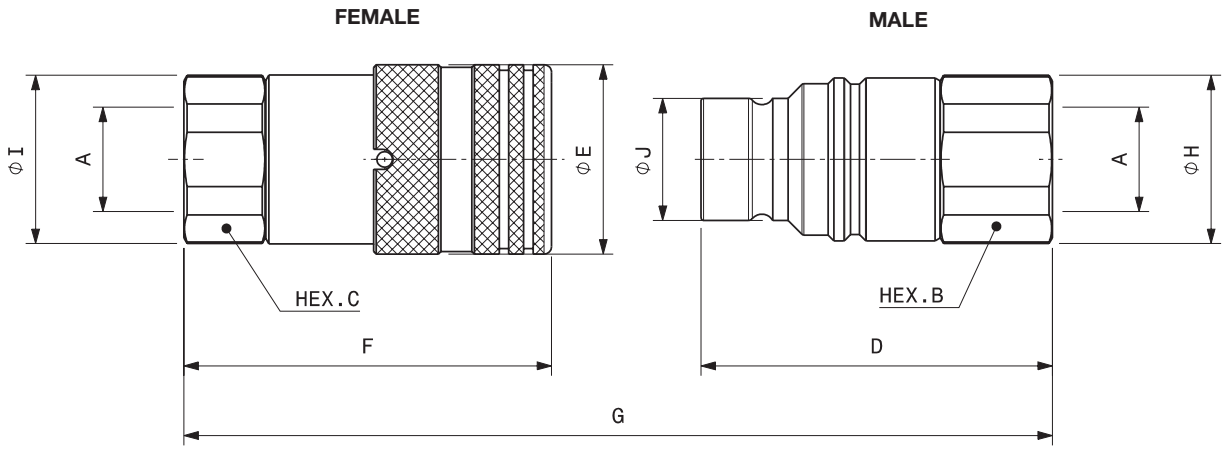

Port description: FEMALE THREAD BSPP (ISO 1179-1)

BODY SIZE	Descriptive Code	Item Code		ISO DN	PORT (A)	Overall Length			Length			Hex			Diameter			Diameter			Weight	
							mm	in		mm	in		mm	in		mm	in		mm	in	kg	lb
1/8"	F FL4 1/8 BSP	Female	802400122	-	1/8"	G	68,4	2,69	F	40,0	1,57	C	19,0	0,75	I	20,5	0,81	E	20,0	0,79	0,07	0,16
	M FL4 1/8 BSP	Male	802400123						D	36,3	1,43	B	17,0	0,67	H	18,5	0,73	J	11,6	0,46	0,04	0,08
1/4"	F FL7 1/4 BSP	Female	802400100	6,3	1/4"	G	86,7	3,41	F	48,3	1,90	C	22,0	0,87	I	23,8	0,94	E	28,0	1,10	0,14	0,31
	M FL7 1/4 BSP	Male	802400101						D	49,4	1,94	B	22,0	0,87	H	23,8	0,94	J	16,1	0,63	0,10	0,22
3/8"	F FL9 3/8 BSP	Female	802400102	10	3/8"	G	108,6	4,28	F	64,2	2,53	C	27,0	1,06	I	29,0	1,14	E	32,0	1,26	0,25	0,54
	M FL9 3/8 BSP	Male	802400103						D	59,9	2,36	B	24,0	0,94	H	26,0	1,02	J	19,7	0,78	0,12	0,27
3/8"	F FL9 1/2 BSP	Female	802400104	10	1/2"	G	116,1	4,57	F	69,2	2,72	C	27,0	1,06	I	29,0	1,14	E	32,0	1,26	0,24	0,53
	M FL9 1/2 BSP	Male	802400105						D	62,4	2,46	B	27,0	1,06	H	29,0	1,14	J	19,7	0,78	0,12	0,26
1/2"	F FL13 1/2 BSP	Female	802400106	12,5	1/2"	G	127,0	5,00	F	73,8	2,91	C	32,0	1,26	I	33,8	1,33	E	38,0	1,50	0,38	0,83
	M FL13 1/2 BSP	Male	802400107						D	70,5	2,78	B	32,0	1,26	H	33,8	1,33	J	24,5	0,96	0,26	0,57
1/2"	F FL13 3/4 BSP	Female	802400108	12,5	3/4"	G	134,0	5,28	F	80,8	3,18	C	36,0	1,42	I	38,5	1,52	E	38,0	1,50	0,38	0,83
	M FL13 3/4 BSP	Male	802400109						D	70,5	2,78	B	36,0	1,42	H	38,5	1,52	J	24,5	0,96	0,26	0,56
5/8"	F FL15 3/4 BSP	Female	802400110	16	3/4"	G	133,8	5,27	F	80,9	3,19	C	36,0	1,42	I	38,5	1,52	E	42,0	1,65	0,49	1,08
	M FL15 3/4 BSP	Male	802400111						D	70,5	2,78	B	36,0	1,42	H	38,5	1,52	J	27,0	1,06	0,28	0,62
3/4"	F FL17 1 BSP	Female	802400112	19	1"	G	153,3	6,04	F	92,9	3,66	C	46,0	1,81	I	49,5	1,95	E	48,0	1,89	0,80	1,75
	M FL17 1 BSP	Male	802400113						D	82,2	3,24	B	46,0	1,81	H	49,5	1,95	J	30,0	1,18	0,43	0,95
1"	F FL21 1-1/4 BSP	Female	802400114	25	1 1/4"	G	173,0	6,81	F	106,2	4,18	C	55,0	2,17	I	59,8	2,35	E	55,0	2,17	1,23	2,70
	M FL21 1-1/4 BSP	Male	802400115						D	90,0	3,54	B	55,0	2,17	H	59,8	2,35	J	36,0	1,42	0,67	1,48
1-1/2"	F FL30 1-1/2 BSP	Female	802400116	38	1 1/2"	G	214,8	8,46	F	132,4	5,21	C	65,0	2,56	I	72,0	2,83	E	80,0	3,15	2,91	6,41
	M FL30 1-1/2 BSP	Male	802400117						D	111,0	4,37	B	70,0	2,76	H	76,0	2,99	J	57,0	2,24	1,89	4,17
2"	F FL45 2 BSP	Female	802400118	51	2"	G	241,5	9,51	F	156,6	6,17	C	80,0	3,15	I	88,5	3,48	E	100,0	3,94	5,23	11,53
	M FL45 2 BSP	Male	802400119						D	123,8	4,87	B	75,0	2,95	H	83,5	3,29	J	73,0	2,87	2,29	5,05

Stucchi®

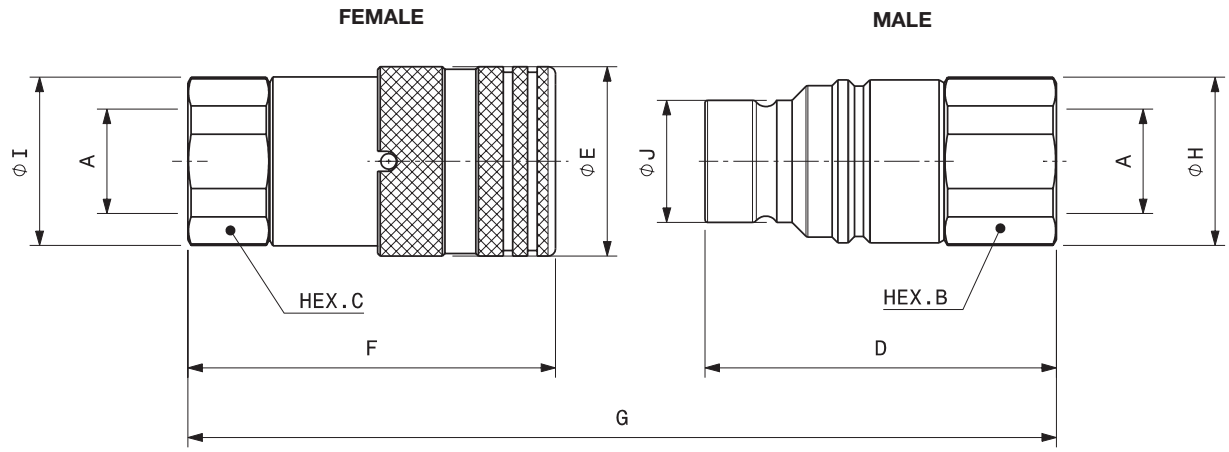

Port description: FEMALE THREAD NPT (ANSI B.1.20.1)

BODY SIZE	Descriptive Code	Item Code		ISO DN	PORT (A)	Overall Length			Length			Hex			Diameter			Diameter			Weight	
							mm	in		mm	in		mm	in		mm	in		mm	in	kg	lb
1/8	**F FL4 1/8 NPT**	Female	**802401118**	-	1/8"	G	68,4	2,69	F	40,0	1,57	C	19,0	0,75	I	20,5	0,81	E	20,0	0,79	0,08	0,17
	M FL4 1/8 NPT	Male	**802401119**						D	36,3	1,43	B	17,0	0,67	H	18,5	0,73	J	11,6	0,46	0,04	0,09
1/4	**F FL7 1/4 NPT**	Female	**802401100**	6,3	1/4"	G	85,2	3,35	F	48,3	1,90	C	22,0	0,87	I	23,8	0,94	E	28,0	1,10	0,14	0,32
	M FL7 1/4 NPT	Male	**802401101**						D	47,9	1,89	B	22,0	0,87	H	23,8	0,94	J	16,1	0,63	0,09	0,21
3/8	**F FL9 3/8 NPT**	Female	**802401102**	10	3/8"	G	108,6	4,27	F	64,2	2,53	C	27,0	1,06	I	29,0	1,14	E	32,0	1,26	0,25	0,54
	M FL9 3/8 NPT	Male	**802401103**						D	59,9	2,36	B	24,0	0,94	H	26,0	1,02	J	19,7	0,78	0,14	0,30
3/8	**F FL9 1/2 NPT**	Female	**802401104**	10	1/2"	G	116,1	4,57	F	69,2	2,72	C	27,0	1,06	I	29,0	1,14	E	32,0	1,26	0,24	0,53
	M FL9 1/2 NPT	Male	**802401105**						D	62,4	2,46	B	27,0	1,06	H	29,0	1,14	J	19,7	0,78	0,14	0,30
1/2	**F FL13 1/2 NPT**	Female	**802401106**	12,5	1/2"	G	124,5	4,90	F	73,8	2,91	C	32,0	1,26	I	33,8	1,33	E	38,0	1,50	0,38	0,83
	M FL13 1/2 NPT	Male	**802401107**						D	68,0	2,68	B	32,0	1,26	H	33,8	1,33	J	24,5	0,96	0,26	0,57
1/2	**F FL13 3/4 NPT**	Female	**802401108**	12,5	3/4"	G	134	5,27	F	80,8	3,18	C	36,0	1,42	I	38,5	1,52	E	38,0	1,50	0,42	0,92
	M FL13 3/4 NPT	Male	**802401109**						D	70,5	2,78	B	36,0	1,42	H	38,5	1,52	J	24,5	0,96	0,27	0,59
5/8	**F FL15 3/4 NPT**	Female	**802401110**	16	3/4"	G	133,8	5,26	F	80,9	3,19	C	36,0	1,42	I	38,5	1,52	E	42,0	1,65	0,50	1,09
	M FL15 3/4 NPT	Male	**802401111**						D	70,5	2,78	B	36,0	1,42	H	38,5	1,52	J	27,0	1,06	0,28	0,62
3/4	**F FL17 1 NPT**	Female	**802401112**	19	1"	G	153,3	6,03	F	92,9	3,66	C	46,0	1,81	I	49,5	1,95	E	48,0	1,89	0,81	1,79
	M FL17 1 NPT	Male	**802401113**						D	82,2	3,24	B	46,0	1,81	H	49,5	1,95	J	30,0	1,18	0,43	0,95
1	**F FL21 1-1/4 NPT**	Female	**802401114**	25	1 1/4"	G	173	6,81	F	106,2	4,18	C	55,0	2,17	I	59,8	2,35	E	55,0	2,17	1,27	2,80
	M FL21 1-1/4 NPT	Male	**802401115**						D	90,0	3,54	B	55,0	2,17	H	59,8	2,35	J	36,0	1,42	0,78	1,72
1-1/2	**F FL30 1-1/2 NPT**	Female	**802401116**	38	1 1/2"	G	214,8	8,45	F	132,4	5,21	C	65,0	2,56	I	72,0	2,83	E	80,0	3,15	2,91	6,41
	M FL30 1-1/2 NPT	Male	**802401117**						D	111,0	4,37	B	70,0	2,76	H	76,0	2,99	J	57,0	2,24	1,90	4,18
2	**F FL45 2 NPT**	Female	**802401120**	51	2"	G	241,5	9,50	F	156,6	6,17	C	80,0	3,15	I	88,5	3,48	E	100,0	3,94	-	-
	M FL45 2 NPT	Male	**802401121**						D	123,8	4,87	B	75,0	2,95	H	83,5	3,29	J	73,0	2,87	-	-

SPARE KIT SEAL FOR MALE

Repair kit / OR+BK		
Body Size	Description	Part Number
3/8”	M FL9	815700247
1/2”	M FL13	815700249
5/8”	M FL15	815700251
3/4”	M FL17	815700253
1”	M FL21	815700255
1-1/2”	M FL30	815700525
2”	M FL45	815700798

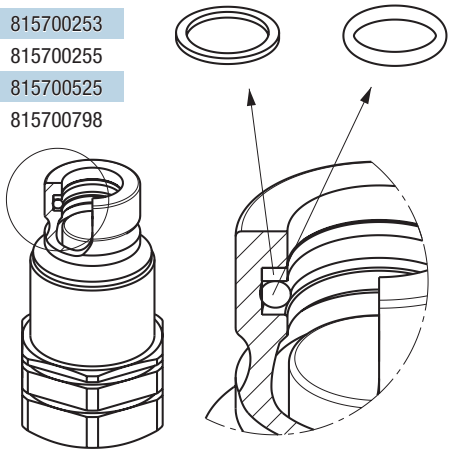

O-Ring in FKM (VITON®)
BackUp in Teflon®

PROTECTIVE CAPS FOR FL SERIES

Protective caps are always recommended to protect the couplings from damage, dirt inclusion, and will increase the product life. This is particularly important in mobile applications where exposure to weather and aggregate materials are common.
The protective caps for FL couplings are manufactured in aluminum with lanyard (colors: natural aluminum).

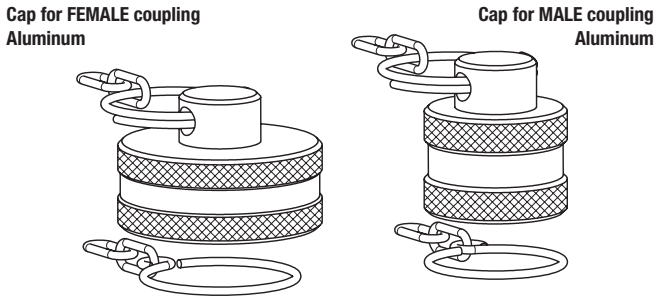

Protective Cap				
Body Size/Description		Part Number		Material/Color
		Cap for Female	Cap for Male	
1/4”	FL7	816005002	816005003	Aluminum/Natural
3/8”	FL9	816005004	816005005	Aluminum/Natural
1/2”	FL13	816005006	816005007	Aluminum/Natural
5/8”	FL15	816005008	816005009	Aluminum/Natural
3/4”	FL17	816005010	816005011	Aluminum/Natural
1”	FL21	816005012	816005013	Aluminum/Natural
1-1/2”	FL30	815105014	815105017	Aluminum/Natural
2”	FL45	815105016	815105019	Aluminum/Natural

The protective caps for FL couplings are also available in plastic (see A series caps at page 49).

STUCCHI Quick Couplings Catalog - December 2024 - All right reserved.
Texts, data and illustrations mentioned in this catalogue may be changed by Stucchi at any time, without notice; always refer to the version uploaded on the English version of stucchigroup.com/en website for the latest release. In case of doubt, please contact Stucchi technical service.

Flat Face Screw

VEP-P p. 87

Valving style: Flat face
Interchange: Stucchi profile
Sealing description: Nitrile NBR
Available sizes: From 1/4” to 2”
Operating pressure: Up to 600 bar
Flow rate: Up to 1000 l/min
Material / Treatment:
Carbon steel / Cr3+QPQ
Connection under pressure:
Allowed

VEP-HD p. 97

Valving style: Flat face
Interchange: Stucchi profile
Sealing description: Nitrile NBR
Available sizes: From 5/8" to 1-1/2”
Operating pressure: Up to 550 bar
Flow rate: Up to 750 l/min
Material / Treatment:
Carbon steel / QPQ
Connection under pressure:
Allowed

VP-P p. 107

Valving style: Flat face
Interchange: Stucchi profile
Sealing description: Nitrile NBR
Available sizes: From 1/4” to 1-1/2”
Operating pressure: Up to 600 bar
Flow rate: Up to 750 l/min
Material / Treatment:
Carbon steel / Cr3+QPQ
Connection under pressure:
Allowed

VEP-PSERIES

INTERCHANGE > **Stucchi VEP profile**

Stucchi®

Easy CUP

BOP

TECHNICAL FEATURES AND OPTIONS

Interchange
Stucchi VEP profile

Sealing description
Nitrile NBR

Connection system
Screw

Available sizes
from 1/4" to 2"

Material /treatment
Carbon steel /Cr3+QPQ (Zn-Ni)

Available threads
BSP - NPT - SAE

Operating pressure
Up to 600 bar

Locking mechanism
Screw to connect

Flow rate
Up to 1000 l/min

Temperature (°C)
-20°C / +100°C

Valving style
Flat face

Connection under pressure
Connection: Both sides (see Benefits).
Disconnection: Allowed (see Benefits).

BENEFITS

- Easy connection/disconnection with both side under residual pressure thanks to the Stucchi design.
- Flat face is easy to clean, reducing the inclusion of contamination inside the hydraulic circuit.
- Specific dimensions of Stucchi VEP-P series are certified with Lloyd Type Approval in accordance with API 16D at specific rating pressure of 345 bar/5000 PSI. For complete technical information please contact technical Stucchi support.
- Minimal fluid spillage during disconnection, reducing fluid spillage to the environment.
- Minimal air inclusion during connection.
- Internal valve design creates minimal pressure drop, maintaining circuit efficiency in the system
- Internal pressure release valve system allows an easy connection with high internal residual pressure.
- The modular design allows flexibility with a wide range of configurations.
- High resistance to pressure impulses.
- Safe and simple to use.

HOW TO USE

- Before to connect, clean the mating surface of the couplings to avoid dirt inclusion in the circuit.
- To connect pull forward the connection sleeve of the female coupling.
- Align the female and male coupling holding forward the connection sleeve and thread together turning the sleeve.
- Keep couplers aligned during connection process. Do not push to connect couplings.
- The screwing of the threads should be done by hand without the use of the tools for the first part of the connection.
- The use of tools for the second part of connection can be necessary if there is high residual pressure in the circuit.
- Screw the connecting sleeve of the female until metal surface contact with the male coupling is complete.
- Tighten the sleeve to the base of the male using the tightening torque spec. as indicated in the table below.
- To disconnect turn sleeve from contact position using a wrench, then unscrew making sure the couplings stay aligned through the entire process.

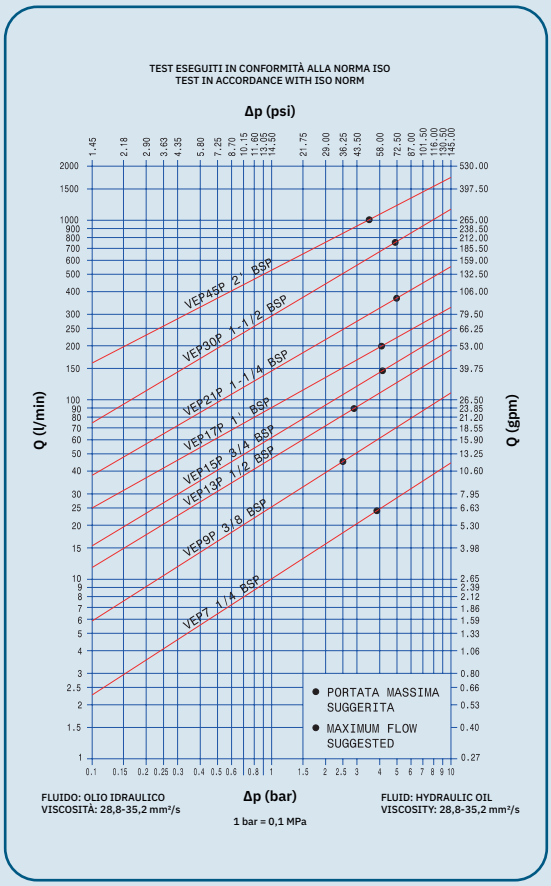

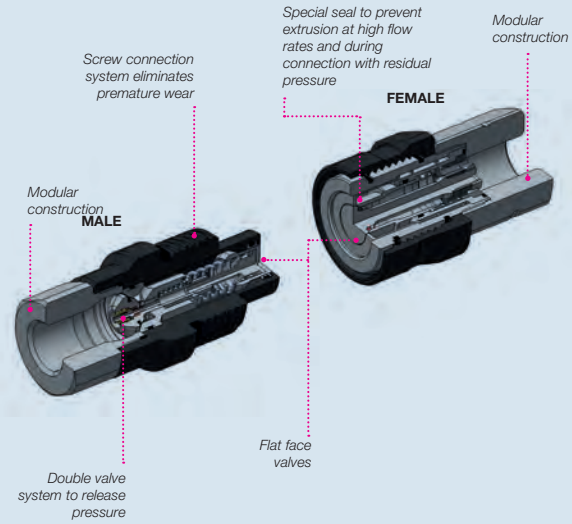

MAIN APPLICATIONS

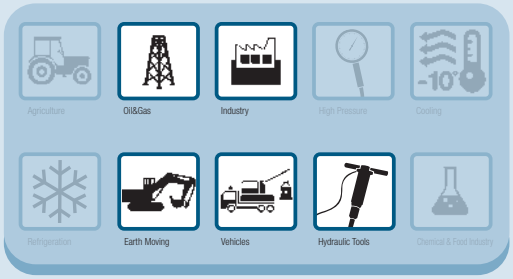

VEP-PSERIES

Stucchi®

PERFORMANCES

Size	Series/Size	Max. flow suggested		Manual connect torque		Manual disconnect torque		Tightening torque		Spillage*
in		l/min	gpm	Nm	lbf ft	Nm	lbf ft	Nm	lbt ft	ml
1/4	VEP7	24	6,36	2,8	2,06	1,9	1,40	40-50	29-37	0,01
3/8	VEP9P	46	12,19	2,2	1,62	1,4	1,03	50-60	37-44	0,04
1/2	VEP13P	90	23,85	1,8	1,33	1,4	1,03	65-75	48-55	0,02
5/8	VEP15P	148	39,22	3,0	2,21	1,8	1,33	70-80	52-59	0,03
3/4	VEP17P	200	53,00	5,6	4,13	3,6	2,65	90-110	66-81	0,01
1	VEP21P	378	100,17	8,2	6,04	5,8	4,27	125-145	92-107	0,06
1-1/2	VEP30P	750	198,75	26,0	19,16	12,5	9,21	155-175	114-129	0,20
2	VEP45P	1000	265,00	40,0	29,48	40,0	29,48	320-350	236-258	0,35

Size	Series/Size	Max. operating pressure						Burst pressure					
		Coupled		Male		Female		Coupled		Male		Female	
in		MPa	psi	MPa	psi	MPa	psi	MPa	psi	MPa	psi	MPa	psi
1/4	VEP7	60	8700	60	8700	42	6090	150	21750	150	21750	126	18270
3/8	VEP9P	55	7975	55	7975	33	4785	140	20300	140	20300	100	14500
1/2	VEP13P	55	7975	55	7975	33	4785	140	20300	140	20300	100	14500
5/8	VEP15P	55	7975	55	7975	33	4785	140	20300	140	20300	100	14500
3/4	VEP17P	50	7250	50	7250	33	4785	125	18125	125	18125	100	14500
1	VEP21P	47	6815	47	6815	30	4350	120	17400	120	17400	80	11600
1-1/2	VEP30P	40	5800	40	5800	27	3915	110	15950	110	15950	80	11600
2	VEP45P	35	5075	35	5075	27	3915	110	15950	110	15950	80	11600

Size	Series/Size	Max. residual pressure during connection						Max. residual pressure during disconnection	
		Male, female to drain		Female, male to drain		Male and Female			
in		MPa	psi	MPa	psi	MPa	psi	MPa	psi
1/4	VEP7	30	4350	30	4350	25	3625	25	3625
3/8	VEP9P	25	3625	25	3625	25	3625	25	3625
1/2	VEP13P	25	3625	25	3625	20	2900	20	2900
5/8	VEP15P	25	3625	25	3625	20	2900	20	2900
3/4	VEP17P	25	3625	25	3625	15	2175	15	2175
1	VEP21P	25	3625	25	3625	15	2175	15	2175
1-1/2	VEP30P	25	3625	25	3625	5	725	5	725
2	VEP45P	25	3625	20	2900	2	290	2	290

* Spillage is an indicative value of the fluid loss during disconnection (according to ISO norm test method). The torque will increase as internal residual pressure increases.

BOP Only configurations mentioned in the dedicated BOP section of this catalog are BOP certified. For complete technical information please contact Stucchi Technical Support.

Note:
VEP7 has metal to metal sealing system in the internal valve of male and in the valve of female coupling. Different male thread are available upon request. VEP45P is available with flange port and flange head connection configuration (code 62) upon request. For complete technical information please contact Stucchi Technical Support.

Different possible configurations:
Different threads available upon request.

Temperature range:
Standard seals NBR, PUR, POM from -20 °C to +100 °C (from -4 °F to +212 °F). Please read carefully Instructions and warnings for proper selection of the products.

Tests performed:
Qualification tests have been performed with hydraulic oil using couplings with NBR (Nitrile) seals. The max. operating pressure have been verified for 100.000 impulses according to ISO norm test method.
The VEP45P coupled and male have been tested for 1.000.000 impulses.

Connection and disconnection with residual pressure in both couplings is recommended for occasional operations only.
For ordinary operations it is suggested to release pressure in one side before to connect and disconnect in way that operator effort and wearing of the couplings are reduced.

Stucchi®

WARNING

A defect, a wrong choice or an improper use of products, can cause injury to persons, animals and objects.
Connect under pressure products are suitable to be connected under residual (static) pressure.
Never connect or disconnect with dynamic pressure (e.g. pump on).
Do not use the female coupling disconnected with high impulse pressure.
Do not couple-uncouple with flow in the circuit.
Do not couple-uncouple when the temperature inside of the circuit is higher than 80 °C (176 °F).
Check the maximum allowable working pressure of the port in use.
It is important to limit contamination in the circuit to avoid compromising the function of the internal valves.
Make sure that the medium used is compatible with seal and material as indicated for each series.
In case of doubt please contact Stucchi Technical Support.
The interchangeability is mentioned under the assumption that the manufacturer of the considered products has not changed any dimension.
It is mandatory to carefully read and closely follow the instructions before selecting or using any Stucchi products.
Always refer to the version uploaded in the Instructions and warning section of stucchigroup.com website for the latest release.
For specific, product-related, instructions, please contact Stucchi technical service.

OVERALL DIMENSIONS

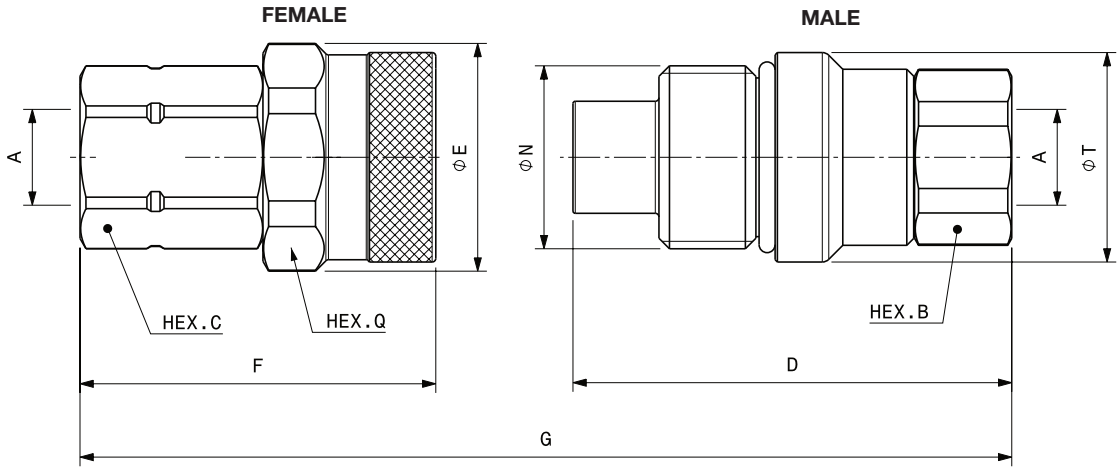

Port description: FEMALE THREAD BSPP (ISO 1179-1)

BODY SIZE	Descriptive Code	Item Code		PORT (A)	N	Overall Length			Length			Hex			Hex			Diameter			Weight	
							mm	in		mm	in		mm	in		mm	in		mm	in	kg	lb
1/4"	F VEP7 1/4 BSP	Female	806500008	1/4"	M30x2	G	113,3	4,46	F	54,1	2,13	C	27,0	1,06	Q	36,0	1,42	E	38,8	1,53	0,25	0,55
	M VEP7 1/4 BSP	Male	806500009						D	71,0	2,80	B	22,0	0,87				T	34,8	1,37	0,23	0,51
3/8"	F VEP9P 3/8 BSP	Female	807200002	3/8"	M33x2	G	131,3	5,17	F	65,8	2,59	C	30,0	1,18	Q	38,0	1,50	E	41,8	1,65	0,33	0,73
	M VEP9P 3/8 BSP	Male	807200003						D	82,5	3,25	B	27,0	1,06				T	37,8	1,49	0,33	0,72
3/8"	F VEP9P 1/2 BSP	Female	807200004	1/2"	M33x2	G	138,8	5,46	F	70,8	2,79	C	30,0	1,18	Q	38,0	1,50	E	41,8	1,65	0,34	0,75
	M VEP9P 1/2 BSP	Male	807200005						D	85,0	3,35	B	27,0	1,06				T	37,8	1,49	0,32	0,71
1/2"	F VEP13P 1/2 BSP	Female	807200006	1/2"	M40x3	G	154,6	6,09	F	77,8	3,06	C	36,0	1,42	Q	46,0	1,81	E	49,8	1,96	0,62	1,36
	M VEP13P 1/2 BSP	Male	807200007						D	95,0	3,74	B	36,0	1,42				T	45,8	1,80	0,60	1,32
1/2"	F VEP13P 3/4 BSP	Female	807200008	3/4"	M40x3	G	164,0	6,46	F	84,8	3,34	C	36,0	1,42	Q	46,0	1,81	E	49,8	1,96	0,59	1,30
	M VEP13P 3/4 BSP	Male	807200009						D	97,4	3,83	B	36,0	1,42				T	45,8	1,80	0,58	1,28
5/8"	F VEP15P 3/4 BSP	Female	807200010	3/4"	M45x3	G	165,4	6,51	F	84,9	3,34	C	41,0	1,61	Q	50,0	1,97	E	53,8	2,12	0,76	1,68
	M VEP15P 3/4 BSP	Male	807200011						D	99,0	3,90	B	36,0	1,42				T	49,8	1,96	0,67	1,48
3/4"	F VEP17P 3/4 BSP	Female	807200024	3/4"	M50x3	G	188,5	7,42	F	97,7	3,85	C	46,0	1,81	Q	55,0	2,17	E	58,8	2,31	1,16	0,05
	M VEP17P 3/4 BSP	Male	807200025						D	113,6	4,47	B	46,0	1,81				T	54,8	2,16	1,13	0,04
3/4"	F VEP17P 1 BSP	Female	807200012	1"	M50x3	G	190,5	7,50	F	99,7	3,93	C	46,0	1,81	Q	55,0	2,17	E	58,8	2,31	1,12	2,46
	M VEP17P 1 BSP	Male	807200013						D	113,6	4,47	B	46,0	1,81				T	54,8	2,16	1,02	2,24
1"	F VEP21P 1 BSP	Female	807200020	1"	M58x3	G	205,2	8,08	F	105,8	4,17	C	55,0	2,17	Q	65,0	2,56	E	69,8	2,75	1,78	3,92
	M VEP21P 1 BSP	Male	807200021						D	123,4	4,86	B	55,0	2,17				T	64,5	2,54	1,54	3,40
1"	F VEP21P 1-1/4 BSP	Female	807200014	1-1/4"	M58x3	G	206,2	8,12	F	106,8	4,20	C	55,0	2,17	Q	65,0	2,56	E	69,8	2,75	1,69	3,71
	M VEP21P 1-1/4 BSP	Male	807200015						D	123,4	4,86	B	55,0	2,17				T	64,5	2,54	1,44	3,17
1-1/2"	F VEP30P 1-1/4 BSP	Female	807200022	1-1/4"	80x4 TpF	G	253,9	10,00	F	133,5	5,26	C	65,0	2,56	Q	85,0	3,35	E	92,0	3,62	3,88	8,55
	M VEP30P 1-1/4 BSP	Male	807200023						D	150,0	5,91	B	65,0	2,56				T	89,8	3,54	3,25	7,15
1-1/2"	F VEP30P 1-1/2 BSP	Female	807200016	1-1/2"	80x4 TpF	G	253,9	10,00	F	133,5	5,26	C	65,0	2,56	Q	85,0	3,35	E	92,0	3,62	3,81	8,40
	M VEP30P 1-1/2 BSP	Male	807200017						D	150,0	5,91	B	65,0	2,56				T	89,8	3,54	3,20	7,05
2"	F VEP45P 2 BSP	Female	807200018	2"	M130x6	G	383,5	15,10	F	224,8	8,85	C	90,0	3,54	Q	-	-	E	200,0	7,87	14,68	32,36
	M VEP45P 2 BSP	Male	807200019						D	218,4	8,60	B	90,0	3,54				T	145,0	5,71	11,89	26,20

VEP-PSERIES

Stucchi®

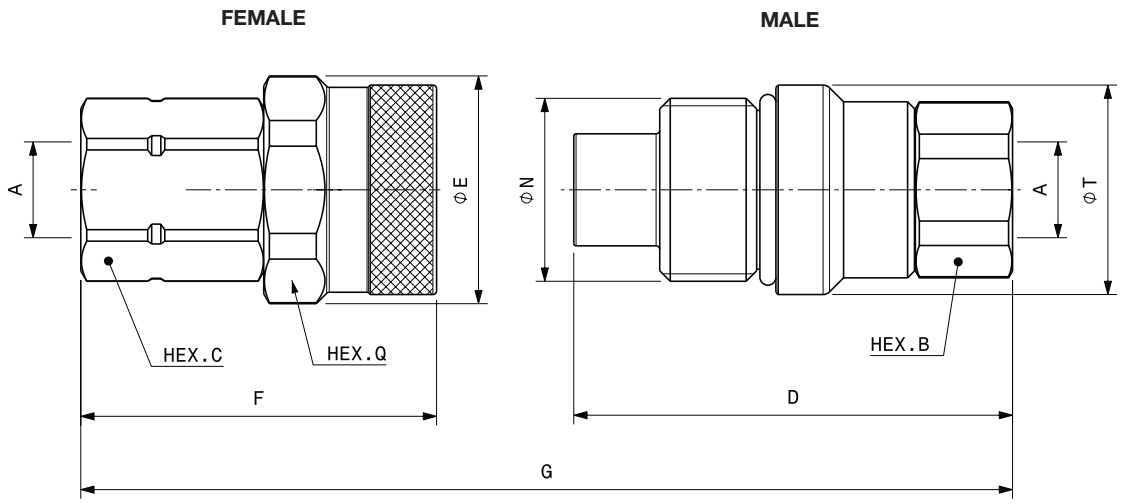

Port description: FEMALE THREAD BSPP (ISO 1179-1) - ZincNickel treatment

BODY SIZE	Descriptive Code	Item Code		Port (A)	N	Overall Length			Length			Hex			Hex			Diameter			Weight	
							mm	in		mm	in		mm	in		mm	in		mm	in	kg	lb
1/4"	F VEP7ZN 1/4 BSP	Female	811900000	1/4"	M30x2	G	113,3	4,46	F	54,1	2,13	C	27,0	1,06	Q	36,0	1,42	E	38,8	1,53	0,25	0,55
	M VEP7ZN 1/4 BSP	Male	811900001						D	71,0	2,80	B	22,0	0,87				T	34,8	1,37	0,23	0,51
3/8"	F VEP9PZN 3/8 BSP	Female	811900002	3/8"	M33x2	G	131,3	5,17	F	65,8	2,59	C	30,0	1,18	Q	38,0	1,50	E	41,8	1,65	0,33	0,73
	M VEP9PZN 3/8 BSP	Male	811900003						D	82,5	3,25	B	27,0	1,06				T	37,8	1,49	0,33	0,72
3/8"	F VEP9PZN 1/2 BSP	Female	811900014	1/2"	M33x2	G	138,8	5,46	F	70,8	2,79	C	30,0	1,18	Q	38,0	1,50	E	41,8	1,65	0,34	0,75
	M VEP9PZN 1/2 BSP	Male	811900015						D	85,0	3,35	B	27,0	1,06				T	37,8	1,49	0,32	0,71
1/2"	F VEP13PZN 1/2 BSP	Female	811900004	1/2"	M40x3	G	154,6	6,09	F	77,8	3,06	C	36,0	1,42	Q	46,0	1,81	E	49,8	1,96	0,62	1,36
	M VEP13PZN 1/2 BSP	Male	811900005						D	95,0	3,74	B	36,0	1,42				T	45,8	1,80	0,60	1,32
1/2"	F VEP13PZN 3/4 BSP	Female	811900016	3/4"	M40x3	G	164,0	6,46	F	84,8	3,34	C	36,0	1,42	Q	46,0	1,81	E	49,8	1,96	0,59	1,30
	M VEP13PZN 3/4 BSP	Male	811900017						D	97,4	3,83	B	36,0	1,42				T	45,8	1,80	0,58	1,28
5/8"	F VEP15PZN 3/4 BSP	Female	811900006	3/4"	M45x3	G	165,4	6,51	F	84,9	3,34	C	41,0	1,61	Q	50,0	1,97	E	53,8	2,12	0,76	1,68
	M VEP15PZN 3/4 BSP	Male	811900007						D	99,0	3,90	B	36,0	1,42				T	49,8	1,96	0,67	1,48
3/4"	F VEP17PZN 1 BSP	Female	811900008	1"	M50x3	G	190,5	7,50	F	99,7	3,93	C	46,0	1,81	Q	55,0	2,17	E	58,8	2,31	1,12	2,46
	M VEP17PZN 1 BSP	Male	811900009						D	113,6	4,47	B	46,0	1,81				T	54,8	2,16	1,02	2,24
1"	F VEP21PZN 1-1/4 BSP	Female	811900010	1-1/4"	M58x3	G	206,2	8,12	F	106,8	4,20	C	55,0	2,17	Q	65,0	2,56	E	69,8	2,75	1,69	3,71
	M VEP21PZN 1-1/4 BSP	Male	811900011						D	123,4	4,86	B	55,0	2,17				T	64,5	2,54	1,44	3,17
1-1/2"	F VEP30PZN 1-1/2 BSP	Female	811900012	1-1/2"	80x4 TpF	G	253,9	10,00	F	133,5	5,26	C	65,0	2,56	Q	85,0	3,35	E	92,0	3,62	3,81	8,40
	M VEP30PZN 1-1/2 BSP	Male	811900013						D	150,0	5,91	B	65,0	2,56				T	89,8	3,54	3,20	7,05

VEP-PSERIES

Stucchi®

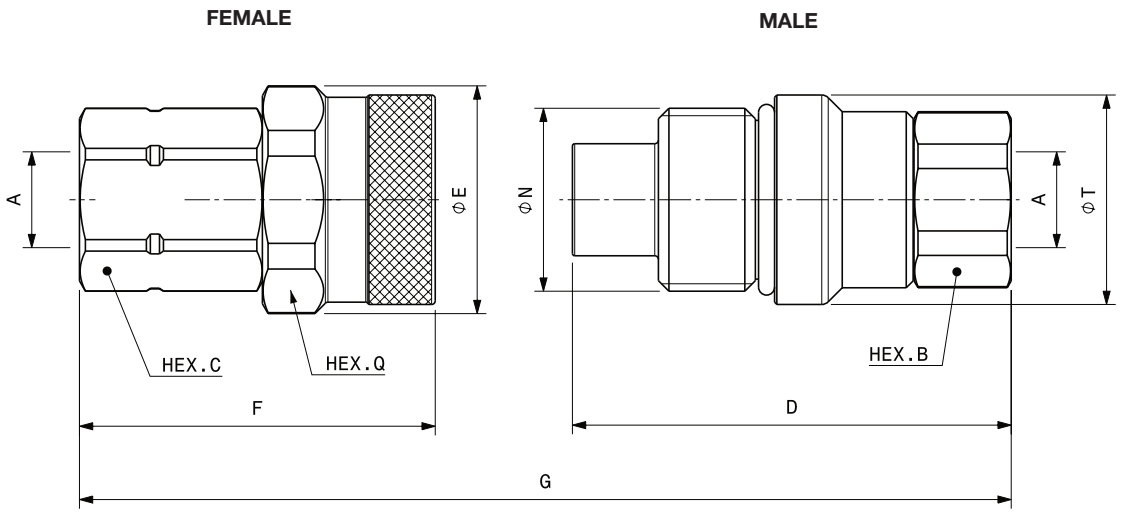

Port description: FEMALE THREAD NPT (ANSI B.1.20.1)

BODY SIZE	Descriptive Code	Item Code	PORT (A)	N	Overall Length			Length			Hex			Hex			Diameter			Weight	
						mm	in		mm	in		mm	in		mm	in		mm	in	kg	lb
1/4"	F VEP7 1/4 NPT	Female 806501008	1/4"	M30x2	G	113,3	4,46	F	54,1	2,13	C	27,0	1,06	Q	36,0	1,42	E	38,8	1,53	0,25	0,55
	M VEP7 1/4 NPT	Male 806501009						D	71,0	2,80	B	22,0	0,87				T	34,8	1,37	0,24	0,52
3/8"	F VEP9P 3/8 NPT	Female 807201002	3/8"	M33x2	G	131,3	5,17	F	65,8	2,59	C	30,0	1,18	Q	38,0	1,50	E	41,8	1,65	0,34	0,74
	M VEP9P 3/8 NPT	Male 807201003						D	82,5	3,25	B	27,0	1,06				T	37,8	1,49	0,33	0,72
3/8"	F VEP9P 1/2 NPT	Female 807201004	1/2"	M33x2	G	138,8	5,46	F	70,8	2,79	C	30,0	1,18	Q	38,0	1,50	E	41,8	1,65	0,35	0,76
	M VEP9P 1/2 NPT	Male 807201005						D	85,0	3,35	B	27,0	1,06				T	37,8	1,49	0,32	0,71
1/2"	F VEP13P 1/2 NPT	Female 807201006	1/2"	M40x3	G	154,6	6,09	F	77,8	3,06	C	36,0	1,42	Q	46,0	1,81	E	49,8	1,96	0,64	1,40
	M VEP13P 1/2 NPT	Male 807201007						D	95,0	3,74	B	36,0	1,42				T	45,8	1,80	0,61	1,33
1/2"	F VEP13P 3/4 NPT	Female 807201008	3/4"	M40x3	G	164,10	6,46	F	84,8	3,34	C	36,0	1,42	Q	46,0	1,81	E	49,8	1,96	0,65	1,43
	M VEP13P 3/4 NPT	Male 807201009						D	97,5	3,84	B	36,0	1,42				T	45,8	1,80	0,62	1,36
5/8"	F VEP15P 3/4 NPT	Female 807201010	3/4"	M45x3	G	165,4	6,51	F	84,9	3,34	C	41,0	1,61	Q	50,0	1,97	E	53,8	2,12	0,77	1,69
	M VEP15P 3/4 NPT	Male 807201011						D	99,0	3,90	B	36,0	1,42				T	49,8	1,96	0,69	1,52
3/4"	F VEP17P 3/4 NPT	Female 807201020	3/4"	M50x3	G	187,5	7,38	F	96,7	3,81	C	46,0	1,81	Q	55,0	2,17	E	58,8	2,31	1,22	2,71
	M VEP17P 3/4 NPT	Male 807201021						D	113,6	4,47	B	46,0	1,81				T	54,8	2,16	1,13	2,52
3/4"	F VEP17P 1 NPT	Female 807201012	1"	M50x3	G	190,5	7,50	F	99,7	3,93	C	46,0	1,81	Q	55,0	2,17	E	58,8	2,31	1,12	2,46
	M VEP17P 1 NPT	Male 807201013						D	113,6	4,47	B	46,0	1,81				T	54,8	2,16	1,03	2,26
1"	F VEP21P 1 NPT	Female 807201022	1"	M58x3	G	205,3	8,08	F	105,8	4,17	C	55,0	2,17	Q	65,0	2,56	E	69,8	2,75	1,89	4,20
	M VEP21P 1 NPT	Male 807201023						D	123,5	4,86	B	55,0	2,17				T	64,5	2,54	1,63	3,61
1"	F VEP21P 1-1/4 NPT	Female 807201014	1-1/4"	M58x3	G	206,2	8,12	F	106,8	4,20	C	55,0	2,17	Q	65,0	2,56	E	69,8	2,75	1,70	3,75
	M VEP21P 1-1/4 NPT	Male 807201015						D	123,4	4,86	B	55,0	2,17				T	64,5	2,54	1,47	3,23
1 1/2"	F VEP30P 1-1/2 NPT	Female 807201016	1-1/2"	80x4 TpF	G	253,9	10,00	F	133,5	5,26	C	65,0	2,56	Q	85,0	3,35	E	92,0	3,62	3,84	8,47
	M VEP30P 1-1/2 NPT	Male 807201017						D	150,0	5,91	B	65,0	2,56				T	89,8	3,54	3,18	7,01
2"	F VEP45P 2 NPT	Female 807201018	2"	M130x6	G	383,5	15,10	F	224,8	8,85	C	90,0	3,54	Q	-	-	E	200,0	7,87	14,76	32,54
	M VEP45P 2 NPT	Male 807201019						D	218,4	8,60	B	90,0	3,54				T	145,0	5,71	11,67	25,73

VEP-PSERIES

Stucchi®

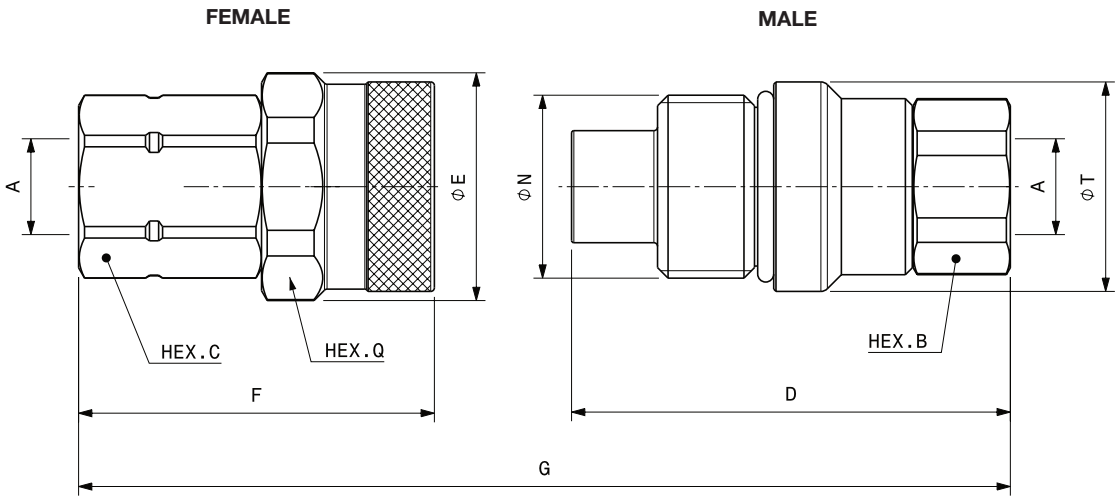

Port description: FEMALE THREAD NPT (ANSI B.1.20.1) - ZincNickel treatment

BODY SIZE	Descriptive Code	Item Code		PORT (A)	N	Overall Length			Length			Hex			Hex			Diameter			Weight	
							mm	in		mm	in		mm	in		mm	in		mm	in	kg	lb
3/8"	F VEP9PZN 3/8 NPT	Female	811901002	3/8"	M33x2	G	131,3	5,17	F	65,8	2,59	C	30,0	1,18	Q	38,0	1,50	E	41,8	1,65	0,34	0,74
	M VEP9PZN 3/8 NPT	Male	811901003						D	82,5	3,25	B	27,0	1,06				T	37,8	1,49	0,33	0,72
3/8"	F VEP13PZN 1/2 NPT	Female	811901004	1/2"	M40x3	G	154,6	6,09	F	77,8	3,06	C	36,0	1,42	Q	46,0	1,81	E	49,8	1,96	0,64	1,40
	M VEP13PZN 1/2 NPT	Male	811901005						D	95,0	3,74	B	36,0	1,42				T	45,8	1,80	0,61	1,33
5/8"	F VEP15PZN 3/4 NPT	Female	811901006	3/4"	M45x3	G	165,4	6,51	F	84,9	3,34	C	41,0	1,61	Q	50,0	1,97	E	53,8	2,12	0,77	1,69
	M VEP15PZN 3/4 NPT	Male	811901007						D	99,0	3,90	B	36,0	1,42				T	49,8	1,96	0,69	1,53
3/4"	F VEP17PZN 3/4 NPT	Female	811901018	3/4"	M50x3	G	187,5	7,38	F	96,7	3,81	C	46,0	1,81	Q	55,0	2,17	E	58,8	2,31	1,22	2,71
	M VEP17PZN 3/4 NPT	Male	811901019						D	113,6	4,47	B	46,0	1,81				T	54,8	2,16	1,13	2,52
3/4"	F VEP17PZN 1 NPT	Female	811901008	1"	M50x3	G	190,5	7,50	F	99,7	3,93	C	46,0	1,81	Q	55,0	2,17	E	58,8	2,31	1,12	2,49
	M VEP17PZN 1 NPT	Male	811901009						D	113,6	4,47	B	46,0	1,81				T	54,8	2,16	1,03	2,29
1"	F VEP21PZN 1 NPT	Female	811901020	1"	M58x3	G	205,3	8,08	F	105,8	4,17	C	55,0	2,17	Q	65,0	2,56	E	69,8	2,75	1,89	4,20
	M VEP21PZN 1 NPT	Male	811901021						D	123,5	4,86	B	55,0	2,17				T	64,5	2,54	1,63	3,61

VEP-PSERIES

Stucchi®

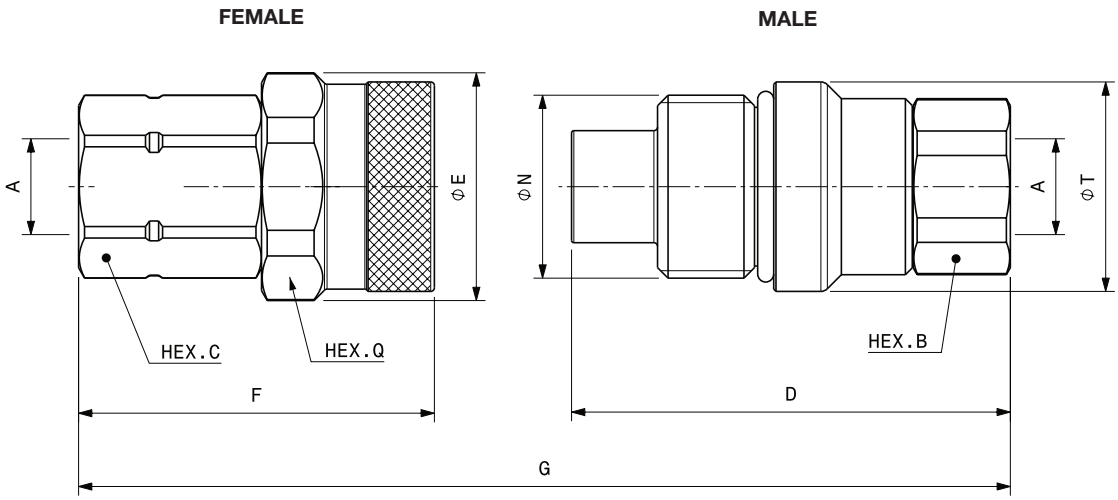

Port description: FEMALE THREAD SAE (ISO11926-1 & SAE J1926-1)

BODY SIZE	Descriptive Code	Item Code	PORT (A)	N	Overall Length			Length			Hex			Hex			Diameter			Weight	
						mm	in		mm	in		mm	in		mm	in		mm	in	kg	lb
1/4"	F VEP7 3/8 SAE	Female 806504008	9/16-18UNF	M30x2	G	118,1	4,65	F	57,1	2,25	C	27,0	1,06	Q	36,0	1,42	E	38,8	1,53	0,25	0,55
	M VEP7 3/8 SAE	Male 806504009						D	72,8	2,87	B	22,0	0,87				T	34,8	1,37	0,23	0,51
3/8"	F VEP9P 3/8 SAE	Female 807204000	9/16-18UNF	M33x2	G	132,5	5,22	F	65,8	2,59	C	30,0	1,18	Q	38,0	1,50	E	41,8	1,65	0,37	0,81
	M VEP9P 3/8 SAE	Male 807204001						D	83,7	3,30	B	27,0	1,06				T	37,8	1,49	0,35	0,77
3/8"	F VEP9P 1/2 SAE	Female 807204002	3/4-16UNF	M33x2	G	140,8	5,54	F	70,8	2,79	C	30,0	1,18	Q	38,0	1,50	E	41,8	1,65	0,35	0,76
	M VEP9P 1/2 SAE	Male 807204003						D	87,0	3,43	B	27,0	1,06				T	37,8	1,49	0,33	0,73
1/2"	F VEP13P 1/2 SAE	Female 807204006	3/4-16UNF	M40x3	G	160,10	6,30	F	77,8	3,06	C	36,0	1,42	Q	46,0	1,81	E	45,8	1,80	0,63	1,39
	M VEP13P 1/2 SAE	Male 807204007						D	100,5	3,96	B	36,0	1,42				T	45,8	1,80	0,67	1,48
1/2"	F VEP13P 3/4 SAE	Female 807204008	1-1/16-12UN	M40x3	G	167,0	6,57	F	84,8	3,34	C	36,0	1,42	Q	46,0	1,81	E	49,8	1,96	0,58	1,28
	M VEP13P 3/4 SAE	Male 807204009						D	100,4	3,95	B	36,0	1,42				T	45,8	1,80	0,59	1,29
5/8"	F VEP15P 3/4 SAE	Female 807204010	1-1/16-12UN	M45x3	G	168,4	6,63	F	84,9	3,34	C	41,0	1,61	Q	50,0	1,97	E	53,8	2,12	0,59	1,29
	M VEP15P 3/4 SAE	Male 807204011						D	102,0	4,02	B	36,0	1,42				T	49,8	1,96	0,68	1,49
3/4"	F VEP17P 3/4 SAE	Female 807204022	1-1/16-12UN	M50x3	G	192,5	7,58	F	99,7	3,93	C	46,0	1,81	Q	55,0	2,17	E	58,8	2,31	-	-
	M VEP17P 3/4 SAE	Male 807204023						D	115,6	4,55	B	46,0	1,81				T	54,8	2,16	1,14	2,51
3/4"	F VEP17P 1 SAE	Female 807204012	1-5/16-12UN	M50x3	G	190,5	7,50	F	99,7	3,93	C	46,0	1,81	Q	55,0	2,17	E	58,8	2,31	1,12	2,46
	M VEP17P 1 SAE	Male 807204013						D	113,6	4,47	B	46,0	1,81				T	54,8	2,16	1,01	2,23
1"	F VEP21P 1 SAE	Female 807204024	1-5/16-12UN	M58x3	G	207,2	8,16	F	105,8	4,17	C	55,0	2,17	Q	65,0	2,56	E	69,8	2,75	-	-
	M VEP21P 1 SAE	Male 807204025						D	125,4	4,94	B	55,0	2,17				T	64,5	2,54	-	-
1"	F VEP21P 1-1/4 SAE	Female 807204014	1-5/8-12UN	M58x3	G	206,2	8,12	F	106,8	4,20	C	55,0	2,17	Q	65,0	2,56	E	69,8	2,75	1,68	3,70
	M VEP21P 1-1/4 SAE	Male 807204015						D	123,4	4,86	B	55,0	2,17				T	64,5	2,54	1,46	3,22
1-1/2"	F VEP30P 1-1/4 SAE	Female 807204026 *	1-5/8-12UN	80x4 TpF	G	253,9	10,00	F	133,5	5,26	C	65,0	2,56	Q	85,0	3,35	E	92,0	3,62	-	-
	M VEP30P 1-1/4 SAE	Male 807204027 *						D	150,0	5,91	B	65,0	2,56				T	89,8	3,54	-	-
1-1/2"	F VEP30P 1-1/2 SAE	Female 807204016	1-7/8-12UN	80x4 TpF	G	253,9	10,00	F	133,5	5,26	C	65,0	2,56	Q	85,0	3,35	E	92,0	3,62	3,82	8,41
	M VEP30P 1-1/2 SAE	Male 807204017						D	150,0	5,91	B	65,0	2,56				T	89,8	3,54	3,16	6,96
2"	F VEP45P 2 SAE	Female 807204018	2-1/2-12UN	M130x6	G	383,5	15,10	F	224,8	8,85	C	90,0	3,54	Q	-	-	E	200,0	7,87	14,60	32,19
	M VEP45P 2 SAE	Male 807204019						D	218,4	8,60	B	90,0	3,54				T	145,0	5,71	12,18	25,85

* Available upon request.

Port description: FEMALE THREAD SAE (ISO 11926 - 1 & SAE J1926 - 1) - ZincNickel treatment

BODY SIZE	Descriptive Code	Item Code	PORT (A)	N	Overall Length			Length			Hex			Hex			Diameter			Weight	
						mm	in		mm	in		mm	in		mm	in		mm	in	kg	lb
1/4"	F VEP7ZN 3/8 SAE	Female 811904000	9/16-18UN	M30x2	G	118,1	4,65	F	57,1	2,25	C	27,0	1,06	Q	36,0	1,42	E	38,8	1,53	0,25	0,55
	M VEP7ZN 3/8 SAE	Male 811904001						D	72,8	2,87	B	22,0	0,87				T	34,8	1,37	0,23	0,51
3/8"	F VEP9PZN 1/2 SAE	Female 811904002	3/4-16UNF	M33x2	G	140,8	5,54	F	70,8	2,79	C	30,0	1,18	Q	38,0	1,50	E	41,8	1,65	0,35	0,76
	M VEP9PZN 1/2 SAE	Male 811904003						D	87,0	3,43	B	27,0	1,06				T	37,8	1,49	0,33	0,73
3/8"	F VEP13PZN 3/4 SAE	Female 811904004	-1/16-12U	M40x3	G	169,1	6,66	F	84,8	3,34	C	36,0	1,42	Q	46,0	1,81	E	49,8	1,96	0,64	1,40
	M VEP13PZN 3/4 SAE	Male 811904005						D	102,5	4,04	B	36,0	1,42				T	45,8	1,80	0,61	1,33
5/8"	F VEP15PZN 3/4 SAE	Female 811904006	-1/16-12U	M45x3	G	168,4	6,63	F	84,9	3,34	C	41,0	1,61	Q	50,0	1,97	E	53,8	2,12	0,59	1,29
	M VEP15PZN 3/4 SAE	Male 811904007						D	102,0	4,02	B	36,0	1,42				T	49,8	1,96	0,68	1,49

VEP-PSERIES

Stucchi®

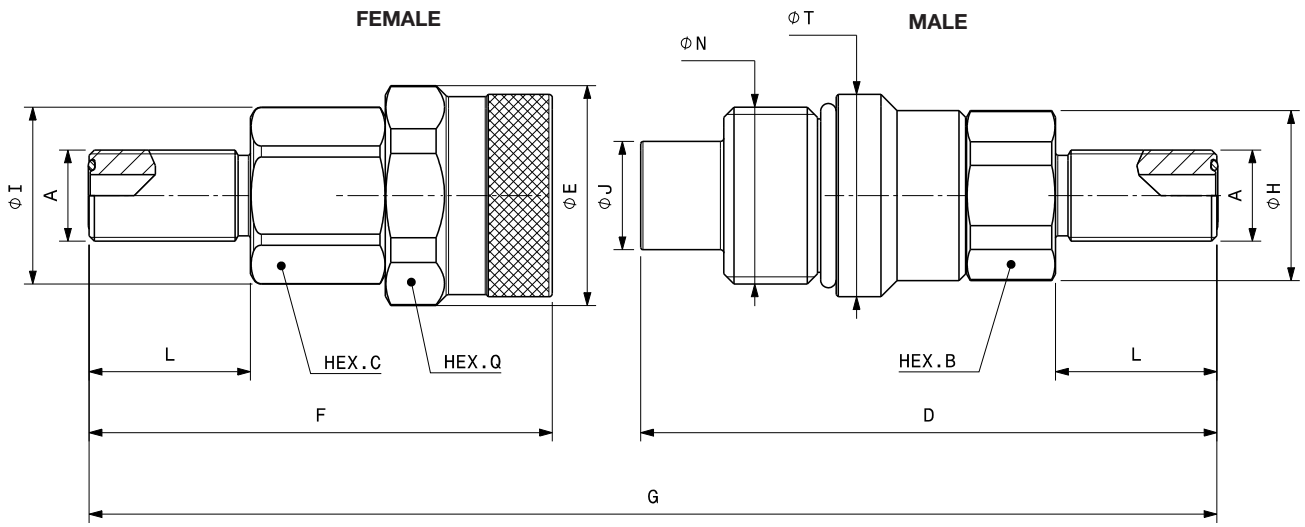

Port description: MALE THREAD ORFS/ORFS BULKHEAD (SAE J1453 or ISO 8434-3)

BODY SIZE	Descriptive Code	Item Code		PORT (A)	N	Overall Length mm	Overall Length in		Length mm	Length in		L Port length mm	L Port length in		Hex mm	Hex in		Hex mm	Hex in		Diameter mm	Diameter in		Weight kg	Weight lb
3/8"	F VEP9P 3/8 ORFS	Female	**807213002**	11/16-16UN	M33x2	G	149,8	5,90	F	73,1	2,88	11	0,433	C	30,0	1,18	Q	38,0	1,50	E	41,8	1,65	0,35	0,77
	M VEP9P 3/8 ORFS	Male	**807213003**						D	93,7	3,69			B	27,0	1,06				T	37,8	1,49	0,36	0,79
3/8"	F VEP9P 3/8 ORFS BH	Female	**807213016**	11/16-16UN	M33x2	G	195,8	7,71	F	96,1	3,78	34	1,339	C	30,0	1,18	Q	38,0	1,50	E	41,8	1,65	0,38	0,84
	M VEP9P 3/8 ORFS BH	Male	**807213017**						D	116,7	4,59			B	27,0	1,06				T	37,8	1,49	0,39	0,86
1/2"	F VEP13P 1/2 ORFS	Female	**807213004**	13/16-16UN	M40x3	G	170,0	6,69	F	81,3	3,20	13	0,512	C	36,0	1,42	Q	46,0	1,81	E	49,8	1,96	0,64	1,41
	M VEP13P 1/2 ORFS	Male	**807213005**						D	106,9	4,21			B	36,0	1,42				T	45,8	1,80	0,65	1,43
1/2"	F VEP13P 1/2 ORFS BH	Female	**807213018**	13/16-16UN	M40x3	G	217,0	8,54	F	104,8	4,13	36.5	1,437	C	36,0	1,42	Q	46,0	1,81	E	49,8	1,96	0,61	1,34
	M VEP13P 1/2 ORFS BH	Male	**807213019**						D	130,4	5,13			B	36,0	1,42				T	45,8	1,80	0,66	1,45
5/8"	F VEP15P 3/4 ORFS	Female	**807213006**	1-3/16-12UN	M45x3	G	180,9	7,12	F	88,0	3,46	17	0,669	C	41,0	1,61	Q	50,0	1,97	E	53,8	2,12	0,73	1,61
	M VEP15P 3/4 ORFS	Male	**807213007**						D	111,4	4,39			B	36,0	1,42				T	49,8	1,96	0,74	1,63
5/8"	F VEP15P 3/4 ORFS BH	Female	**807213020**	1-3/16-12UN	M45x3	G	229,9	9,05	F	112,5	4,43	41.5	1,634	C	41,0	1,61	Q	50,0	1,97	E	53,8	2,12	0,82	1,80
	M VEP15P 3/4 ORFS BH	Male	**807213021**						D	135,9	5,35			B	36,0	1,42				T	49,8	1,96	0,78	1,72
3/4"	F VEP17P 1 ORFS	Female	**807213008**	1-7/16-12UN	M50x3	G	211,3	8,32	F	108,7	4,28	17.5	0,689	C	46,0	1,81	Q	55,0	2,17	E	58,8	2,31	1,19	2,62
	M VEP17P 1 ORFS	Male	**807213009**						D	125,4	4,94			B	46,0	1,81				T	54,8	2,16	1,11	2,44
3/4"	F VEP17P 1 ORFS BH	Female	**807213022**	1-7/16-12UN	M50x3	G	260,5	10,26	F	133,4	5,25	42	1,654	C	46,0	1,81	Q	55,0	2,17	E	58,8	2,31	1,32	2,90
	M VEP17P 1 ORFS BH	Male	**807213023**						D	149,9	5,90			B	46,0	1,81				T	54,8	2,16	1,21	2,66
1-1/2"	F VEP21P 1-1/4 ORFS	Female	**807213010**	1-11/16-12UN	M58x3	G	215,5	8,48	F	110,3	4,34	17.5	0,689	C	55,0	2,17	Q	65,0	2,56	E	69,8	2,75	1,73	3,81
	M VEP21P 1-1/4 ORFS	Male	**807213011**						D	129,2	5,09			B	55,0	2,17				T	64,5	2,54	1,51	3,32
1-1/2"	F VEP21P 1-1/4 ORFS BH	Female	**807213024**	1-11/16-12UN	M58x3	G	264,5	10,41	F	134,8	5,31	42	1,654	C	55,0	2,17	Q	65,0	2,56	E	69,8	2,75	1,85	4,07
	M VEP21P 1-1/4 ORFS BH	Male	**807213025**						D	153,7	6,05			B	55,0	2,17				T	64,5	2,54	1,67	3,67

Locknuts available upon request.

SPARE KIT SEAL FOR MALE

Repair kit / OR+BK+EXTERNAL OR		
Body Size	Description	Part Number
1/4”	M VEP7	815700735
3/8”	M VEP9P	815700736
1/2”	M VEP13P	815700737
5/8”	M VEP15P	815700738
3/4”	M VEP17P	815700739
1”	M VEP21P	815700740
1-1/2”	M VEP30P*	815700741
2”	M VEP45P	815700728

* OR + O-Ring holder

O-Ring in Nitrile
BackUp in Teflon®

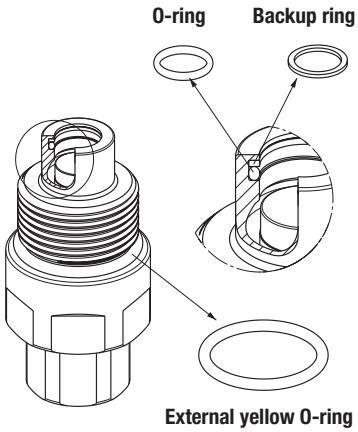

PROTECTIVE CAPS FOR VEP-P SERIES

Protective caps are always recommended to protect the couplings from damage, dirt inclusion, and will increase the product life. This is particularly important in mobile applications where exposure to weather and aggregate materials are common.
For VEP-P two solutions are available:
• threaded aluminum cap with lanyard (standard colors: natural aluminum, other colors available upon request)
• threaded plastic cap with lanyard (standard color black).
Caps and plugs are also available without lanyard, upon request.

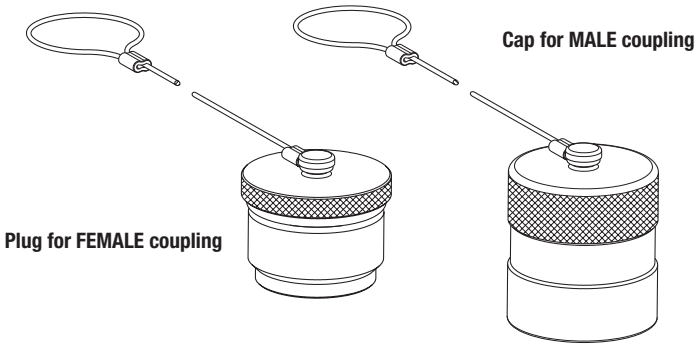

Protective Cap				
Body Size/Description		Part Number		Material/Color
		Plug for Female	Cap for Male	
1/4”	VEP7	815305070	815305071	Aluminum/Natural
3/8”	VEP9	815305072	815305073	Aluminum/Natural
1/2”	VEP13	815305074	815305075	Aluminum/Natural
5/8”	VEP15	815305076	815305077	Aluminum/Natural
3/4”	VEP17	815305078	815305079	Aluminum/Natural
1”	VEP21	815305080	815305081	Aluminum/Natural
1-1/2”	VEP30	815305082	815305083	Aluminum/Natural
2”	VEP45	815305042	815305043	Aluminum/Natural

Protective Cap				
Body Size/Description		Part Number		Material/Color
		Plug for Female	Cap for Male	
1/2”	VEP13	815303128	815303129	Plastic/Black
5/8”	VEP15	815303130	815303131	Plastic/Black
3/4”	VEP17	815303132	815303133	Plastic/Black
1”	VEP21	815303134	815303135	Plastic/Black
1-1/2”	VEP30	815303136	815303137	Plastic/Black

STUCCHI Quick Couplings Catalog - December 2024 - All right reserved.
Texts, data and illustrations mentioned in this catalogue may be changed by Stucchi at any time, without notice; always refer to the version uploaded on the English version of stucchigroup.com/en website for the latest release. In case of doubt, please contact Stucchi technical service.

VEP-HDSERIES

INTERCHANGE > **Stucchi VEP profile**

Stucchi®

Easy CUP

BOP

TECHNICAL FEATURES AND OPTIONS

Interchange
Stucchi VEP profile

Sealing description
Nitrile NBR

Connection system
Screw
HDL version= lock system

Available sizes
from 5/8" to 1-1/2"

Material /treatment
Carbon steel /QPQ (Zn-Ni)

Available threads
BSP - NPT - SAE - FLANGE

Operating pressure
Up to 550 bar

Locking mechanism
Screw to connect

Flow rate
Up to 750 l/min

Temperature (°C)
-20°C / +100°C

Valving style
Flat Face

Connection under pressure
Connection: Both sides (see Benefits).
Disconnection: Allowed (see Benefits).

BENEFITS

- Easy connection/disconnection with both side under residual pressure thanks to the Stucchi design.
- Flat face is easy to clean, reducing the inclusion of contamination inside the hydraulic circuit.
- AVEP15HD, VEP17HD, VEP21HD and VEP30HD are certified with Lloyd Type Aproval in accordance with API 16D at specific rating pressure of 345 bar/5000 psi. For complete technical information please contact Stucchi Technical Support.
- Minimal fluid spillage during disconnection, reducing fluid spillage to the environment.
- Minimal air inclusion during connection.
- Internal valve design creates minimal pressure drop, maintaining circuit efficiency in the system
- Internal pressure release valve system allows an easy connection with high internal residual pressure.
- The modular design allows flexibility with a wide range of configurations.
- High resistance to pressure impulses.
- Safe and simple to use.
- HDL version= lock system included.

HOW TO USE

- Before to connect, clean the mating surface of the couplings to avoid dirt inclusion in the circuit.
- To connect pull forward the connection sleeve of the female coupling.
- Align the female and male coupling holding forward the connection sleeve and thread together turning the sleeve.
- Keep couplers aligned during connection process. Do not push to connect couplings.
- The screwing of the threads should be done by hand without the use of the tools for the first part of the connection.
- The use of tools for the second part of connection can be necessary if there is high residual pressure in the circuit.
- Screw the connecting sleeve of the female until metal surface contact with the male coupling is complete.
- Tighten the sleeve to the base of the male using the tightening torque spec. as indicated in the table below.
- To disconnect turn sleeve from contact position using a wrench, then unscrew making sure the couplings stay aligned through the entire process.
- HDL version: in addition to the instructions here above remove external yellow O-ring on the male. To connect: 1st step connect by hand till metal to metal contact; 2nd step use tool to reach proper Tightening torque as indicated in the specific table; 3rd step insert cotter pin.
- Provide an adequate maintenance of the parts (washing with clear water, lubricating and greasing the QPQ surface) to extend the life in corrosive environment.

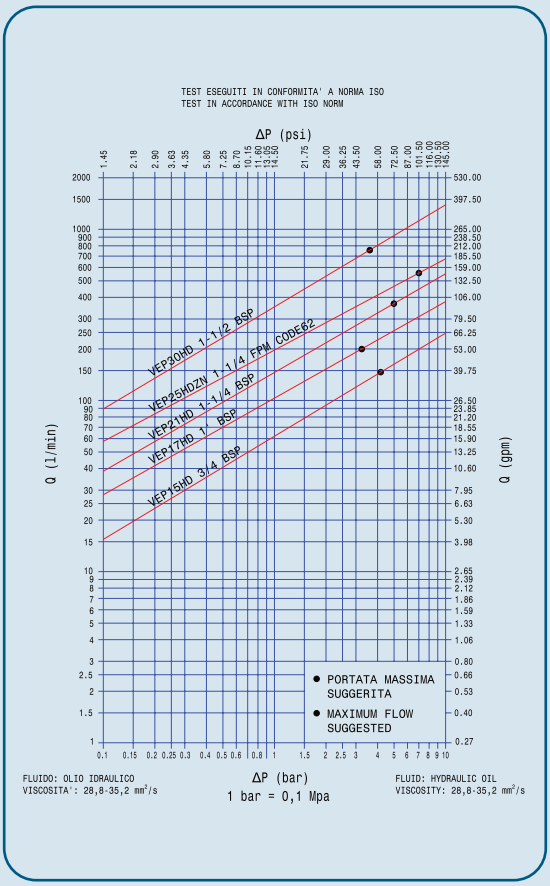

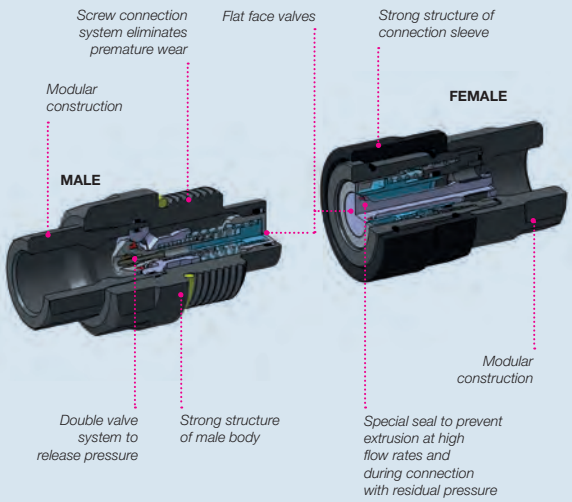

Size 25 has Zn-Ni as standard treatment

MAIN APPLICATIONS

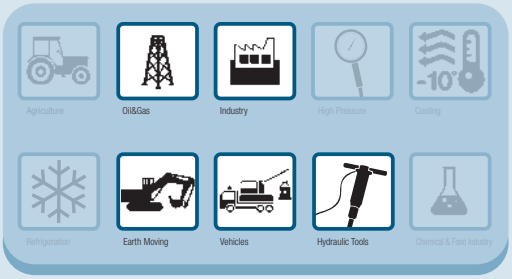

VEP-HDSERIES

Stucchi®

PERFORMANCES VEP-HD, VEP-HDL ALL THREADS

Size	Series/Size	Max. flow suggested		Manual connect torque		Manual disconnect torque		Tightening torque		Spillage*
in		l/min	gpm	Nm	lbf ft	Nm	lbf ft	Nm	lbt ft	ml
5/8	VEP15HD	148	39,22	3,0	2,21	1,8	1,33	70-80	52-59	0,03
3/4	VEP17HD	200	53,00	5,6	4,13	3,6	2,65	110-130	81-96	0,02
1	VEP21HD	378	100,17	8,2	6,04	5,8	4,27	125-145	92-107	0,06
1-1/4	VEP25HDZN	576	152,64	8,5	6,27	6,0	4,43	140-160	103-118	0,06
1-1/2	VEP30HD	750	198,75	26,0	19,16	12,5	9,21	155-175	114-129	0,20

PERFORMANCES FOR VEP-HD, VEP-HDL STANDARD THREADS

Size	Series/Size	Max. operating pressure						Burst pressure					
		Coupled		Male		Female		Coupled		Male		Female	
in		MPa	psi	MPa	psi	MPa	psi	MPa	psi	MPa	psi	MPa	psi
5/8	VEP15HD	55	7975	55	7975	33	4785	140	20300	140	20300	100	14500
3/4	VEP17HD	50	7250	50	7250	33	4785	125	18130	125	18130	100	14500
1	VEP21HD	47	6815	47	6815	30	4350	120	17400	120	17400	80	11600
1-1/4	VEP25HDZN	42	6090	42	6090	30	4350	120	17400	120	17400	80	11600
1-1/2	VEP30HD	40	5800	40	5800	27	3915	110	15950	110	15950	80	11600

Size	Series/Size	Max. residual pressure during connection						Max. residual pressure during disconnection	
		Male, female to drain		Female, male to drain		Male and female			
in		MPa	psi	MPa	psi	MPa	psi	MPa	psi
5/8	VEP15HD	25	3625	25	3625	20	2900	20	2900
3/4	VEP17HD	25	3625	25	3625	15	2175	15	2175
1	VEP21HD	25	3625	25	3625	15	2175	15	2175
1-1/4	VEP25HDZN	25	3625	25	3625	5	725	5	2175
1-1/2	VEP30HD	25	3625	25	3625	5	725	5	725

PERFORMANCES VEP-HD & VEP-HDL FLANGE

Size	Series/Size	Max. operating pressure						Burst pressure					
		Coupled		Male		Female		Coupled		Male		Female	
in		MPa	psi	MPa	psi	MPa	psi	MPa	psi	MPa	psi	MPa	psi
3/4	VEP17HD FLANGE	42	6090	42	6090	33	4785	165	24000	165	24000	100	14500
1	VEP21HD FLANGE	42	6090	42	6090	30	4350	165	24000	165	24000	80	11600
1-1/4	VEP25HDZN FLANGE	42	6090	42	6090	30	4350	165	24000	165	24000	80	11600
1-1/2	VEP30HD FLANGE	42	6090	42	6090	27	3915	165	24000	165	24000	80	11600

Size	Series/Size	Tightening torque		Max. residual pressure during connection						Max. residual pressure during disconnection	
				Male, female to drain		Female, male to drain		Male and female			
in		Nm	lbt ft	MPa	psi	MPa	psi	MPa	psi	MPa	psi
3/4	VEP17HD FLANGE	110-130	81-96	25	3625	25	3625	15	2175	15	2175
1	VEP21HD FLANGE	125-145	92-107	25	3625	25	3625	15	2175	15	2175
1-1/4	VEP25HDZN FLANGE	140-160	103-118	25	3625	25	3625	5	725	5	725
1-1/2	VEP30HD FLANGE	155-175	114-129	25	3625	25	3625	5	725	5	725

* Spillage is an indicative value of the fluid loss during disconnection (according to ISO norm test method). Connect torque and disconnect torque without residual pressure. The torque will increase as internal residual pressure increases.

Port configurations include internal female threads:
- BSP, NPT and SAE.
- CODE62 flange ports (ISO 6162-2 and SAE J518 interchangeable).

Two ports options are available:
FP "Flange Port" (4 bolt mating configuration).
FH "Flange Head" (head configuration and sealing groove).

BOP Only configurations mentioned in the dedicated BOP section of this catalog are BOP certified.

Different possible configurations:
Zn-Ni treatment is a standard for VEP25HD and avaiable upon request for the others size.
Different threads available upon request.

Temperature range:
Standard seals NBR, PUR, POM from -20 °C to +100 °C (from -4 °F to +212 °F).
Please read carefully Instructions and warnings for proper selection of the products.

Tests:
Qualification tests have been performed with hydraulic oil using couplings with NBR (Nitrile) seals.
The max. operating pressure have been verified for 1.000.000 impulses according to ISO norm test method (VEP15HD and VEP25HDZN 500.000 impulses).
(VEP15HD and VEP25HDZN 500.000 impulses).

The couplings uncoupled have been tested at max. operating pressure for 100.000 impulses.

Connection and disconnection with residual pressure in both couplings is recommended for occasional operations only.
For ordinary operations it is suggested to release pressure in one side before to connect and disconnect in way that operator effort and wearing of the couplings are reduced.

VEP-HDSERIES

Stucchi®

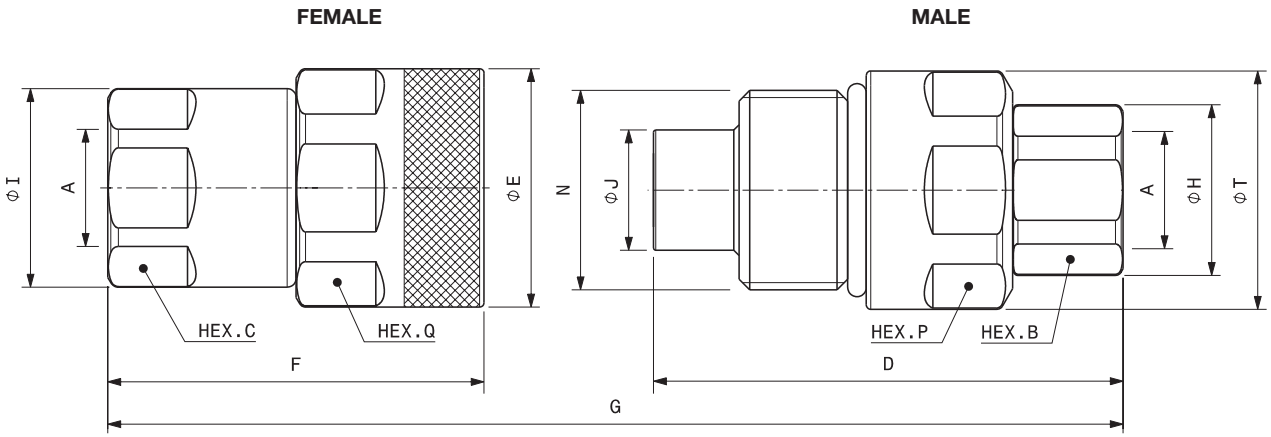

Port description: FEMALE THREAD BSPP (ISO 1179-1)

BODY SIZE	Descriptive Code	Item Code		PORT (A)	N	Overall Length			Length			Hex			Hex			Diameter			Weight	
							mm	in		mm	in		mm	in		mm	in		mm	in	kg	lb
5/8"	F VEP15HD 3/4 BSP	Female	808100010	3/4"	M45x3	G	172,4	6,79	F	84,9	3,34	C	41,0	1,61	Q	50,0	1,97	E	53,8	2,12	0,92	2,03
	M VEP15HD 3/4 BSP	Male	808100011						D	106	4,17	B	36,0	1,42	P	50,0	1,97	T	53,8	2,12	0,94	2,07
3/4"	F VEP17HD 3/4 BSP	Female	808100018	3/4"	M50x3	G	200,9	7,91	F	99,7	3,93	C	46,0	1,81	Q	55,0	2,17	E	58,8	2,12	1,33	2,93
	M VEP17HD 3/4 BSP	Male	808100019						D	124,0	4,88	B	46,0	1,81	P	55,0	2,17	T	58,8	2,12	1,36	3,00
3/4"	F VEP17HD 1 BSP	Female	808100012	1"	M50x3	G	200,9	7,91	F	99,7	3,93	C	46,0	1,81	Q	55,0	2,17	E	58,8	2,31	1,28	2,82
	M VEP17HD 1 BSP	Male	808100013						D	124,0	4,88	B	46,0	1,81	P	55,0	2,17	T	58,8	2,31	1,30	2,87
1"	F VEP21HD 1 BSP	Female	808100020	1"	M58x3	G	216,2	8,51	F	106,8	4,20	C	55,0	2,17	Q	65,0	2,56	E	69,8	2,75	2,10	4,61
	M VEP21HD 1 BSP	Male	808100021						D	133,4	5,25	B	55,0	2,17	P	65,0	2,56	T	69,8	2,75	1,78	3,92
1"	F VEP21HD 1-1/4 BSP	Female	808100014	1-1/4"	M58x3	G	216,2	8,51	F	106,8	4,20	C	55,0	2,17	Q	65,0	2,56	E	69,8	2,75	2,02	4,45
	M VEP21HD 1-1/4 BSP	Male	808100015						D	133,4	5,25	B	55,0	2,17	P	65,0	2,56	T	69,8	2,75	1,79	3,95
1-1/4"	F VEP25HDZN 1-1/4 BSP	Female	812200010	1-1/4"	Rd68 x1/6	G	230,0	9,06	F	115,6	4,55	C	55,0	2,17	Q	75,0	2,95	E	80,0	3,15	2,68	5,91
	M VEP25HDZN 1-1/4 BSP	Male	812200011						D	141,8	5,58	B	65,0	2,56	P	70,0	2,76	T	80,0	3,15	2,44	5,38
1-1/2"	F VEP30HD 1-1/4 BSP	Female	808100022	1-1/4"	80x4 TpF	G	253,9	10,00	F	133,5	5,26	C	65,0	2,56	Q	85,0	3,35	E	95,0	3,74	4,40	9,69
	M VEP30HD 1-1/4 BSP	Male	808100023						D	150,0	5,91	B	65,0	2,56	P	75,0	2,95	T	82,5	3,25	3,36	7,39
1-1/2"	F VEP30HD 1-1/2 BSP	Female	808100016	1-1/2"	80x4 TpF	G	253,9	10,00	F	133,5	5,26	C	65,0	2,56	Q	85,0	3,35	E	95,0	3,74	4,36	9,61
	M VEP30HD 1-1/2 BSP	Male	808100017						D	150,0	5,91	B	65,0	2,56	P	75,0	2,95	T	94,4	3,72	3,30	7,28

Port description: FEMALE THREAD BSPP (ISO 1179 - 1) - ZincNickel treatment

BODY SIZE	Descriptive Code	Item Code		PORT (A)	N	Overall Length			Length			Hex			Hex			Diameter			Weight	
							mm	in		mm	in		mm	in		mm	in		mm	in	kg	lb
3/4"	F VEP17HDZN 3/4 BSP	Female	812200008	3/4"	M50x3	G	200,9	7,91	F	99,7	3,93	C	46,0	1,81	Q	55,0	2,17	E	58,8	2,12	1,33	2,93
	M VEP17HDZN 3/4 BSP	Male	812200009						D	124,0	4,88	B	46,0	1,81	P	55,0	2,17	T	58,8	2,12	1,36	3,00
3/4"	F VEP17HDZN 1 BSP	Female	812200012	1"	M50x3	G	200,9	7,91	F	99,7	3,93	C	46,0	1,81	Q	55,0	2,167	E	58,8	2,12	1,28	2,82
	M VEP17HDZN 1 BSP	Male	812200013						D	124,0	4,88	B	46,0	1,81	P	55,0	2,17	T	58,8	2,12	1,30	2,87
1"	F VEP21HDZN 1-1/4 BSP	Female	812200014	1-1/4"	M58x3	G	216,2	8,51	F	106,8	4,20	C	55,0	2,17	Q	65,0	2,56	E	69,8	2,75	2,02	4,45
	M VEP21HDZN 1-1/4 BSP	Male	812200015						D	133,4	5,25	B	55,0	2,17	P	65,0	2,56	T	69,8	2,75	1,79	3,95
1-1/2"	F VEP30HDZN 1-1/4 BSP	Female	812200018	1-1/4"	80X4 TpF	G	253,9	10,00	F	133,5	5,26	C	65,0	2,56	Q	85,0	3,35	E	95,0	3,74	4,40	9,69
	M VEP30HDZN 1-1/4 BSP	Male	812200019						D	150,0	5,91	B	65,0	2,56	P	75,0	2,95	T	82,5	3,25	3,36	7,39
1-1/2"	F VEP30HDZN 1-1/2 BSP	Female	812200016	1-1/2"	80X4 TpF	G	253,9	10	F	166,5	6,56	C	65,0	2,56	Q	65,0	2,55	E	95,0	3,74	4,36	9,61
	M VEP30HDZN 1-1/2 BSP	Male	812200017						D	183,0	7,21	B	65,0	2,56	P	55,0	2,15	T	94,4	3,72	3,30	7,28

VEP-HDSERIES

Stucchi®

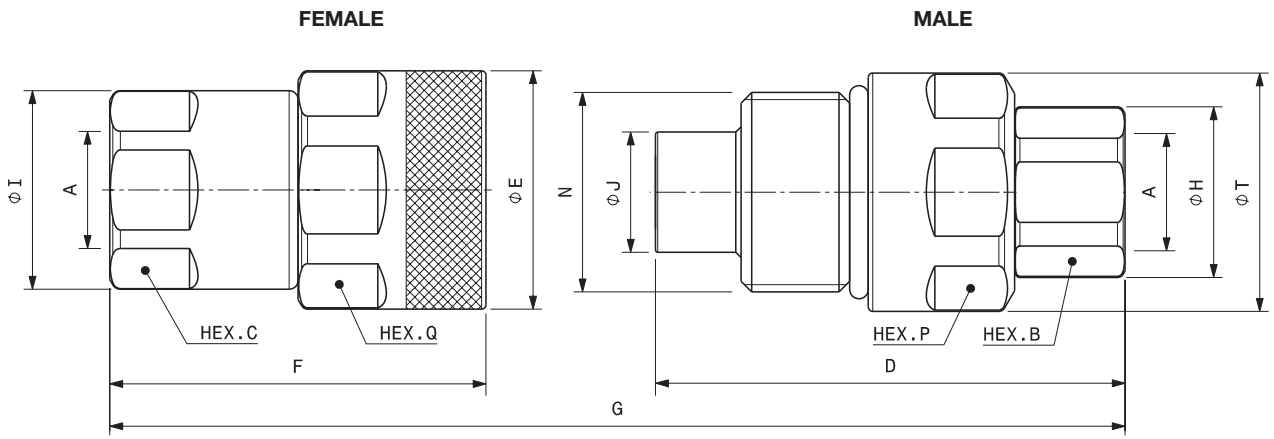

Port description: FEMALE THREAD NPT (ANSI B.1.20.1)

BODY SIZE	Descriptive Code	Item Code		PORT (A)	N	Overall Length			Length			Hex			Hex			Diameter			Weight	
							mm	in		mm	in		mm	in		mm	in		mm	in	kg	lb
5/8"	F VEP15HD 3/4 NPT	Female	808101010	3/4"	M45x3	G	172,4	6,79	F	84,9	3,34	C	41,0	1,61	Q	50,0	1,97	E	53,8	2,12	0,93	2,05
	M VEP15HD 3/4 NPT	Male	808101011						D	106	4,17	B	36,0	1,42	P	50,0	1,97	T	53,8	2,12	0,95	2,09
3/4"	F VEP17HD 3/4 NPT	Female	808101018	3/4"	M50x3	G	201,0	7,91	F	99,7	3,93	C	46,0	1,81	Q	55,0	2,17	E	58,8	2,31	1,34	2,95
	M VEP17HD 3/4 NPT	Male	808101019						D	124,1	4,89	B	46,0	1,81	P	55,0	2,17	T	58,8	2,31	1,42	3,13
3/4"	F VEP17HD 1 NPT	Female	808101012	1"	M50x3	G	200,9	7,91	F	99,7	3,93	C	46,0	1,81	Q	55,0	2,17	E	58,8	2,31	1,28	2,82
	M VEP17HD 1 NP	Male	808101013						D	124,0	4,88	B	46,0	1,81	P	55,0	2,17	T	58,8	2,31	1,30	2,87
1"	F VEP21HD 1 NPT	Female	808101020	1"	M58x3	G	216,2	8,51	F	106,8	4,20	C	55,0	2,17	Q	55,0	2,17	E	69,8	2,75	2,11	4,65
	M VEP21HD 1 NPT	Male	808101021						D	133,4	5,25	B	55,0	2,17	P	55,0	2,17	T	69,8	2,75	1,89	4,15
1"	F VEP21HD 1-1/4 NPT	Female	808101014	1-1/4"	M58x3	G	216,2	8,51	F	106,8	4,20	C	55,0	2,17	Q	65,0	2,56	E	69,8	2,75	2,02	4,45
	M VEP21HD 1-1/4 NPT	Male	808101015						D	133,4	5,25	B	55,0	2,17	P	65,0	2,56	T	69,8	2,75	1,79	3,95
1-1/4"	F VEP25HDZN 1-1/4 NPT	Female	812201058	1-1/4"	Rd68 x1/6	G	227,7	8,77	F	110,6	4,35	C	55,0	2,17	Q	75,0	2,95	E	80,0	3,15	2,68	5,91
	M VEP25HDZN 1-1/4 NPT	Male	812201059						D	139,5	5,49	B	65,0	2,56	P	70,0	2,76	T	80,0	3,15	2,44	5,38
1-1/2"	F VEP30HD 1-1/2 NPT	Female	808101016	1-1/2"	80x4 TpF	G	253,9	10,00	F	133,5	5,26	C	65,0	2,56	Q	85,0	3,35	E	95,0	3,74	4,36	9,61
	M VEP30HD 1-1/2 NPT	Male	808101017						D	150,0	5,91	B	65,0	2,56	P	75,0	2,95	T	94,4	3,72	3,30	7,28

VEP-HDSERIES

Stucchi®

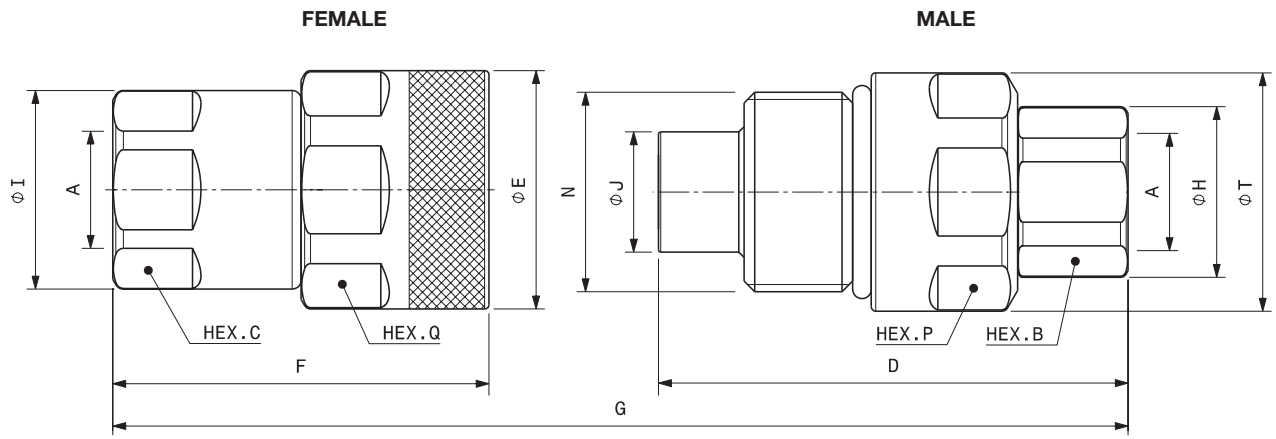

Port description: FEMALE THREAD SAE (ISO 11926-1 & SAE J1926-1)

BODY SIZE	Descriptive Code	Item Code		PORT (A)	N	Overall Length			Length			Hex			Hex			Diameter			Weight	
							mm	in		mm	in		mm	in		mm	in		mm	in	kg	lb
5/8"	F VEP15HD 3/4 SAE	Female	808104010	1-1/16-12UN	M45x3	G	172,4	6,79	F	84,9	3,34	C	41,0	1,61	Q	50,0	1,97	E	53,8	2,12	0,91	2,01
	M VEP15HD 3/4 SAE	Male	808104011						D	106	4,17	B	41,0	1,61	P	50,0	1,97	T	53,8	2,12	1,0	2,20
3/4"	F VEP17HD 1 SAE	Female	808104012	1-5/16-12UN	M50x3	G	201,9	7,95	F	100,7	3,96	C	46,0	1,81	Q	55,0	2,17	E	58,8	2,31	1,27	2,80
	M VEP17HD 1 SAE	Male	808104013						D	124,0	4,88	B	46,0	1,81	P	55,0	2,17	T	58,8	2,31	1,29	2,84
1"	F VEP21HD 1 SAE	Female	808104020	1-5/16-12UN	M58x3	G	216,2	8,51	F	106,8	4,20	C	55,0	2,17	Q	65,0	2,56	E	69,8	2,75	2,11	4,65
	M VEP21HD 1 SAE	Male	808104021						D	133,4	5,25	B	55,0	2,17	P	65,0	2,56	T	69,8	2,75	1,89	4,15
1"	F VEP21HD 1-1/4 SAE	Female	808104014	1-5/8-12UN	M58x3	G	216,2	8,51	F	106,8	4,20	C	55,0	2,17	Q	65,0	2,56	E	69,8	2,75	2,01	4,43
	M VEP21HD 1-1/4 SAE	Male	808104015						D	133,4	5,25	B	55,0	2,17	P	65,0	2,56	T	69,8	2,75	1,78	3,92
1-1/4"	F VEP25HDZN 1-1/4 SAE	Female	812204058	1-5/8-12UN-2B	Rd68 x1/6	G	227,7	8,77	F	110,6	4,35	C	55,0	2,17	Q	75,0	2,95	E	80,0	3,15	2,68	5,91
	M VEP25HDZN 1-1/4 SAE	Male	812204059						D	139,5	5,49	B	65,0	2,56	P	70,0	2,76	T	80,0	3,15	2,44	5,38
1-1/2"	F VEP30HD 1-1/4 SAE	Female	808104022	1-5/8-12UN-2B	80x4 TpF	G	253,9	10,00	F	133,5	5,26	C	65,0	2,56	Q	85,0	3,35	E	95,0	3,74	4,42	9,73
	M VEP30HD 1-1/4 SAE	Male	808104023						D	150,0	5,91	B	65,0	2,56	P	75,0	2,95	T	94,4	3,72	3,38	7,43
1-1/2"	F VEP30HD 1-1/2 SAE	Female	808104016	1-7/8-12UN	80x4 TpF	G	253,9	10,00	F	133,5	5,26	C	65,0	2,56	Q	85,0	3,35	E	95,0	3,74	4,34	9,56
	M VEP30HD 1-1/2 SAE	Male	808104017						D	150,0	5,91	B	65,0	2,56	P	75,0	2,95	T	94,4	3,72	3,28	7,23

Port description: FEMALE THREAD SAE (ISO 11926 - 1 & SAE J1926 - 1) - ZincNickel treatment

BODY SIZE	Descriptive Code	Item Code		PORT (A)	N	Overall Length			Length			Hex			Hex			Diameter			Weight	
							mm	in		mm	in		mm	in		mm	in		mm	in	kg	lb
5/8"	F VEP15HDZN 3/4 SAE	Female	812204010	1-1/16-12UN	M45x3	G	172,4	6,79	F	84,9	3,34	C	41,0	1,61	Q	50,0	1,97	E	53,8	2,12	0,91	2,01
	M VEP15HDZN 3/4 SAE	Male	812204011						D	106,0	4,17	B	41,0	1,61	P	50,0	1,97	T	53,8	2,12	1,00	2,20
3/4"	F VEP17HDZN 1 SAE	Female	812204012	1-5/16-12UN	M50x3	G	201,9	7,95	F	100,7	3,96	C	46,0	1,81	Q	55,0	2,17	E	58,8	2,31	1,27	2,80
	M VEP17HDZN 1 SAE	Male	812204013						D	124,0	4,88	B	46,0	1,81	P	55,0	2,17	T	58,8	2,31	1,29	2,84
1"	F VEP21HDZN 1-1/4 SAE	Female	812204014	1-5/8-12UN	M58x3	G	216,2	8,51	F	106,8	4,20	C	55,0	2,17	Q	65,0	2,56	E	69,8	2,75	2,01	4,43
	M VEP21HDZN 1-1/4 SAE	Male	812204015						D	133,4	5,25	B	55,0	2,17	P	65,0	2,56	T	69,8	2,75	1,78	3,92
1-1/2"	F VEP30HDZN 1-1/2 SAE	Female	812204016	1-7/8-12UN	Rd68x1/6	G	253,9	10,00	F	133,5	5,26	C	65,0	2,56	Q	85,0	3,35	E	95,0	3,74	4,34	9,56
	M VEP30HDZN 1-1/2 SAE	Male	812204017						D	150,0	5,91	B	65,0	2,56	P	75,0	2,95	T	94,4	3,72	3,28	7,23

VEP-HDSERIES

Stucchi®

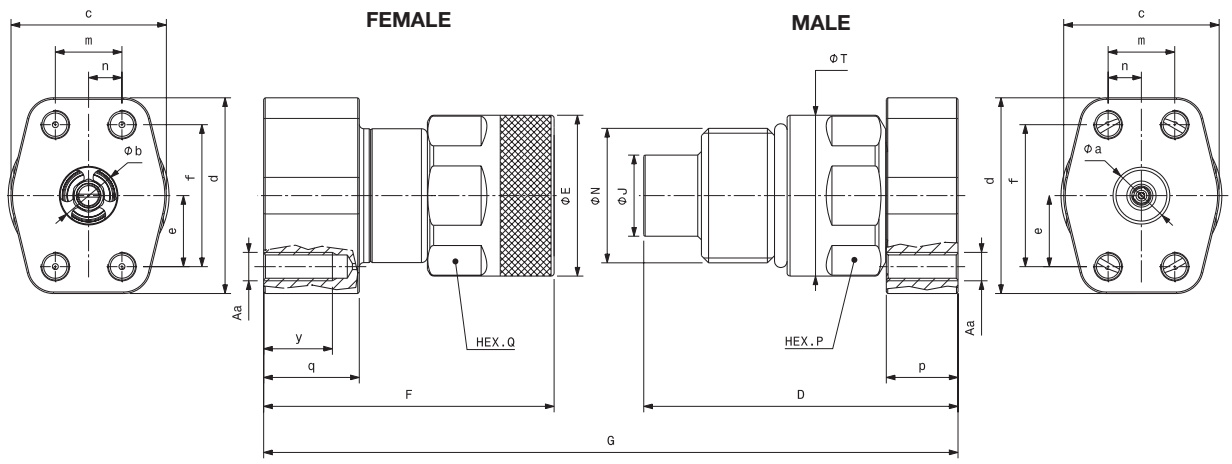

Port description: FLANGE PORT – 4 THREADED HOLES (ISO 6162-2 6000 psi & SAE J518)

For more detailed dimensions please contact Stucchi Technical support.

BODY SIZE	Descriptive Code	Item Code		Diameter mm	Diameter in	N	Overall Length mm	Overall Length in	Length mm	Length in	Hex mm	Hex in	Diameter mm	Diameter in	Weight kg	Weight lb
3/4"	F VEP17HD 1 FPU CODE62 7/16-14UNC	Female	808124020	b 22,5	0,89	M50x3	G 217,9	8,58	F 115,7	6,13	Q 55,0	2,16	E 58,8	2,31	1,68	3,70
	M VEP17HD 1 FPU CODE62 7/16-14UNC	Male	808124021	a 22,0	0,87				D 125,0	6,90	P 55,0	2,16	T 58,8	2,31	1,65	3,64
1"	F VEP21HD 1 FPM CODE62 M12	Female	808124018	b 22,5	0,89	M58x3	G 228	8,98	F 116,8	4,6	Q 65,0	2,56	E 69,8	2,75	3,00	6,61
	M VEP21HD 1 FPM CODE62 M12	Male	808124019	a 22,5	0,89				D 135,2	5,32	P 65,0	2,56	T 69,8	2,75	2,97	6,55
1"	F VEP21HD 1-1/4 FPM CODE62 M14	Female	808124026	b 25,6	1,01	M58x3	G 228	8,98	F 116,8	4,6	Q 65,0	2,56	E 69,8	2,75	3,39	7,47
	M VEP21HD 1-1/4 FPM CODE62 M14	Male	808124027	a 25,0	0,98				D 135,2	5,32	P 65,0	2,56	T 69,8	2,75	2,97	6,55
1"	F VEP21HD 1-1/4 FPU CODE62 1/2-13UNC	Female	808124022	b 25,6	1,01	M58x3	G 215	8,46	F 115,8	6,72	Q 65,0	2,56	E 69,8	2,75	2,60	5,73
	M VEP21HD 1-1/4 FPU CODE62 1/2-13UNC	Male	808124023	a 25,6	1,01				D 123,2	7,25	P 65,0	2,56	T 69,8	2,75	2,16	4,76
1-1/4"	F VEP25HDZN 1-1/4 FPM CODE62 M12	Female	812224058	b 31,8	1,25	Rd68 x1/6	G 234,5	9,23	F 122,5	4,82	Q 37	1,46	E 80	3,15	3,72	8,20
	M VEP25HDZN 1-1/4 FPM CODE62 M12	Male	812224059	a 31,8	1,25				D 139,4	5,49	P 35	1,38	T 80	3,15	3,28	7,23
1-1/4"	F VEP25HDZN 1-1/4 FPU CODE62 1/2-13UNC	Female	812224060	b 31,8	1,25	Rd68 x1/6	G 234,5	9,23	F 122,5	4,82	Q 37	1,46	E 80	3,15	3,72	8,20
	M VEP25HDZN 1-1/4 FPU CODE62 1/2-13UNC	Male	812224061	a 31,8	1,25				D 139,4	5,49	P 35	1,38	T 80	3,15	3,28	7,23
1-1/2"	F VEP30HD 1-1/4 FPM CODE62 M14	Female	808124034	b 32,0	1,26	80x4 Tr	G 266,5	10,49	F 148,5	8,25	Q 85,0	3,35	E 95,0	3,74	5,23	11,53
	M VEP30HD 1-1/4 FPM CODE62 M14	Male	808124035	a 32,0	1,26				D 147,6	8,33	P 75,0	2,95	T 94,4	3,72	3,85	8,49
1-1/2"	F VEP30HD 1-1/2 FPU CODE62 5/8-11UNC	Female	808124024	b 35,0	1,38	80x4 Tr	G 276,6	10,89	F 156,6	6,17	Q 85,0	3,35	E 95,0	3,74	6,91	15,23
	M VEP30HD 1-1/2 FPU CODE62 5/8-11UNC	Male	808124025	a 32,0	1,26				D 149,6	5,89	P 75,0	2,95	T 94,4	3,72	4,81	10,60
1-1/2"	F VEP30HD 1-1/2 FPM CODE62 M16	Female	808124028	b 35,0	1,38	80x4 Tr	G 262,6	10,34	F 150,6	5,93	Q 85,0	3,35	E 95,0	3,74	6,91	15,23
	M VEP30HD 1-1/2 FPM CODE62 M16	Male	808124029	a 32,0	1,26				D 141,6	5,57	P 75,0	2,95	T 94,4	3,72	4,81	10,60
1-1/2"	F VEP30HD 1-1/4 FPU CODE62 1/2-13UNC	Female	808124036	b 32,0	1,26	TpF80x4	G 266,5	10,49	F 148,5	5,85	Q 85,0	3,35	E 95,0	3,74	5,91	13,02
	M VEP30HD 1-1/4 FPU CODE62 1/2-13UNC	Male	808124037	a 32,0	1,26				D 147,6	5,81	P 75,0	2,95	T 94,4	3,72	4,17	9,19
1-1/2"	F VEP30HD 1-1/4 FPM CODE62 M12	Female	808124040	b 32,0	1,26	TpF80x4	G 266,5	10,49	F 148,5	5,85	Q 85,0	3,35	E 95,0	3,74	5,92	13,05
	M VEP30HD 1-1/4 FPM CODE62 M12	Male	808124041	a 32,0	1,26				D 147,6	5,81	P 75,0	2,95	T 94,4	3,72	4,18	9,22

Port description: FLANGE PORT – 4 THREADED HOLES (ISO 6162 - 2 6000 psi & SAE J518) - ZincNickel treatment

BODY SIZE	Descriptive Code	Item Code		Diameter mm	Diameter in	N	Overall Length mm	Overall Length in	Length mm	Length in	Hex mm	Hex in	Diameter mm	Diameter in	Weight kg	Weight lb
1"	F VEP21HDZN 1 FPM CODE62 M12	Female	812224018	b 22,5	0,89	M58x3	G 228	8,98	F 116,8	4,60	Q 65,0	2,56	E 69,8	2,75	3,00	6,61
	M VEP21HDZN 1 FPM CODE62 M12	Male	812224019	a 22,5	0,89				D 135,2	5,32	P 65,0	2,56	T 69,8	2,75	2,97	6,55
1-1/4"	F VEP30HDZN 1-1/4 FPM CODE62 M12	Female	812224040	b 31,8	1,25	Rd68x1/6	G 234,5	9,23	F 122,5	4,83	Q 37,0	1,46	E 80,0	3,15	3,72	8,20
	M VEP30HDZN 1-1/4 FPM CODE62 M12	Male	812224041	a 31,8	1,25				D 139,4	5,49	P 35,0	1,38	T 80,0	3,15	3,28	7,23
1-1/2"	F VEP30HDZN 1-1/2 FPU CODE62 5/8-11UNC	Female	812224024	b 35,0	1,38	80x4 Tr	G 276,6	10,89	F 156,6	6,17	Q 85,0	3,35	E 95,0	3,74	6,91	15,23
	M VEP30HDZN 1-1/2 FPU CODE62 5/8-11UNC	Male	812224025	a 32	1,26				D 149,6	5,89	P 75,0	2,95	T 94,4	3,72	4,17	9,19

Designation example VEP17HD1" FPU/M:

- VEP-HD (coupling series)
- 17 (size coupling Stucchi)
- 1" (size of flange)
- FP (Flange Port)
- U (flange threaded holes type UNC; M in case of metric threaded holes)
- CODE 62 (flanged coupling solution)

For complete technical information contact Stucchi via stucchigroup.com Contacts Form.

VEP-HDSERIES

Stucchi®

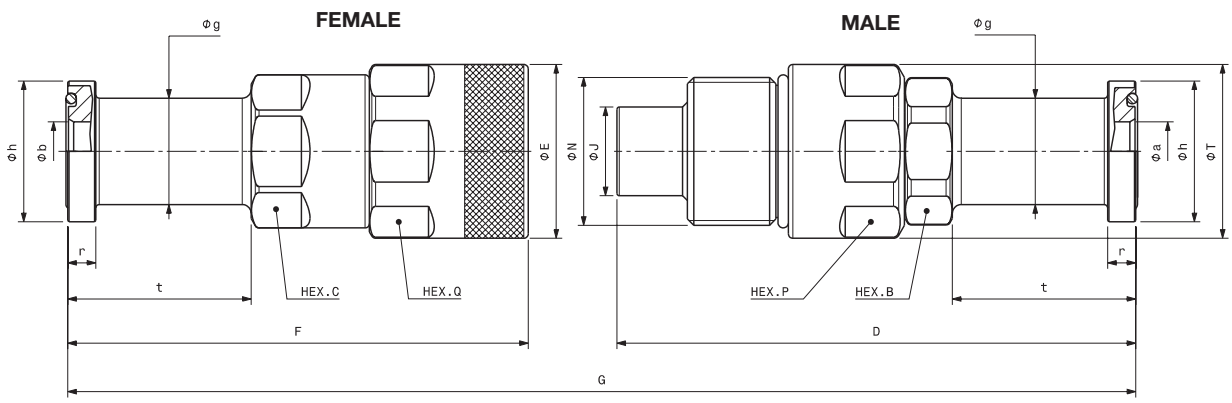

Port description: FLANGE HEAD – WITH O-RING (ISO 6162-2 6000 psi & SAE J518)

For more detailed dimensions please contact Stucchi Technical support.

BODY SIZE	Descriptive Code	Item Code		Diameter			N	Overall Length			Length			Hex			Hex			Diameter			Weight	
					mm	in			mm	in		mm	in		mm	in		mm	in		mm	in	kg	lb
3/4"	F VEP17HD 1 FH CODE62	Female	**808124012**	b	20,0	0,79	M50x3	G	308,3	12,14	F	155,7	6,13	C	46,0	1,81	Q	55,0	2,16	E	58,8	2,31	1,68	3,70
	M VEP17HD 1 FH CODE62	Male	**808124013**	a	20,0	0,79					D	175,4	6,90	B	46,0	1,81	P	55,0	2,16	T	58,8	2,31	1,65	3,63
1"	F VEP21HD 1-1/4 FH CODE 62	Female	**808124014**	b	25,6	1,01	M58x3	G	331,0	13,03	F	170,8	6,72	C	55,0	2,16	Q	65,0	2,56	E	69,8	2,75	2,60	5,72
	M VEP21HD 1-1/4 FH CODE 62	Male	**808124015**	a	25,6	1,01					D	184,2	7,25	B	55,0	2,16	P	65,0	2,56	T	69,8	2,75	2,16	4,75
1-1/4"	F VEP25HDZN 1-1/4 CODE 62 FH	Female	**812224062**	b	31,6	1,24	Rd68 x1/6	G	385,1	15,16	F	219,1	8,63	C	55,0	2,16	Q	75,0	2,95	E	80,0	3,15	2,68	5,91
	M VEP25HDZN 1-1/4 CODE 62 FH	Male	**812224063**	a	31,6	1,24					D	193,4	7,61	B	65,0	2,56	P	70,0	2,76	T	80,0	3,15	2,82	6,22
1-1/2"	F VEP30HD 1-1/4 FH CODE62	Female	**808124038**	b	28,0	1,1	TpF80x4	G	371,5	14,63	F	199,5	7,85	-	-	-	Q	85,0	3,35	E	95,0	3,74	5,04	11,11
	M VEP30HD 1-1/4 FH CODE62	Male	**808124039**	a	28,0	1,1					D	201,6	7,94	-	-	-	P	75,0	2,95	T	94,4	3,72	3,66	8,07
1-1/2"	F VEP30HD 1-1/2 FH CODE 62	Female	**808124016**	b	32,0	1,26	TpF80x4	G	391,5	15,41	F	209,5	8,25	C	65,0	2,56	Q	85,0	3,35	E	95,0	3,74	5,23	11,51
	M VEP30HD 1-1/2 FH CODE 62	Male	**808124017**	a	32,0	1,26					D	211,6	8,33	B	65,0	2,56	P	75,0	2,95	T	94,4	3,72	3,85	8,47

Port description: FLANGE HEAD – WITH O-RING (ISO 6162-2 6000 psi & SAE J518) - ZincNickel treatment

BODY SIZE	Descriptive Code	Item Code		Diameter			N	Overall Length			Length			Hex			Hex			Diameter			Weight	
					mm	in			mm	in		mm	in		mm	in		mm	in		mm	in	kg	lb
1-1/2"	F VEP30HDZN 1-1/4 FH CODE62	Female	**812224038**	b	28	1,1	TpF80x4	G	371,5	14,63	F	199,5	7,85	-	-	-	Q	85,0	3,35	E	95,0	3,74	5,04	11,11
	M VEP30HDZN 1-1/4 FH CODE62	Male	**812224039**	a	28	1,1					D	201,6	7,94	-	-	-	P	75,0	2,95	T	94,4	3,72	3,66	8,07
1-1/2"	F VEP30HDZN 1-1/2 FH CODE62	Female	**812224016**	b	32	1,26	TpF80x4	G	391,5	15,41	F	209,5	8,25	C	65,0	2,56	Q	85,0	3,35	E	95,0	3,74	5,23	11,51
	M VEP30HDZN 1-1/2 FH CODE62	Male	**812224017**	a	32	1,26					D	211,6	8,33	B	65,0	2,56	P	75,0	2,95	T	94,4	3,72	3,85	8,47

Designation example VEP17HD1"FH:

- VEP-HD (coupling series)
- 17 (size coupling Stucchi)
- 1" (size of flange)
- FH (Flange Head)
- CODE 62 (flanged coupling solution)

For complete technical information contact Stucchi via stucchigroup.com Contacts Form.

Stucchi®

VEP-HDL version

VEP-HDL option is a female quick coupling interchangeable with standard VEP-HD series (flat face design, screw connection, connectable with residual pressure system), but equipped with special anti-unscrewing sleeve.

This series is suggested for specific heavy duty applications where the most severe pressure impulses are present, or else where you want to ensure that the operator successfully connect the male in the female coupling.

Female VEP-HDL version is interchangeable with male VEP-HD after removing yellow male external O-ring (upon request male without external O-ring).

Available sizes 5/8”, 3/4”, 1”, 1-1/2"

Tested at 420 bar for 500.000 impulses connected.

For specific codes and configuration or any other information, please contact Stucchi Technical Support.

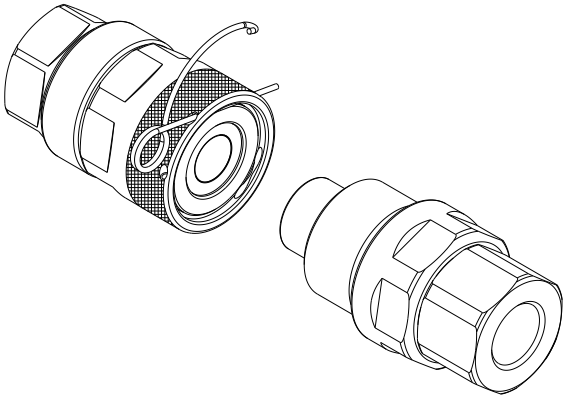

90°version

VEP-HD is available upon request also in special configuration with 90° fitting.

This version is ideal for applications with less space that requires a compact design and it guarantees the correct bending of the hose.

For specific codes, configuration or any other information, please contact Stucchi Technical Support.

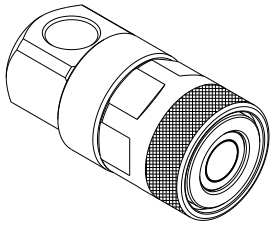

WARNING

A defect, a wrong choice or an improper use of products, can cause injury to persons, animals and objects.
Connect under pressure products are suitable to be connected under residual (static) pressure.
Never connect or disconnect with dynamic pressure (e.g. pump on).
Do not use the female coupling disconnected with high impulse pressure.
Do not couple-uncouple with flow in the circuit.
Do not couple-uncouple when the temperature inside of the circuit is higher than 80 °C (176 °F).
Check the maximum allowable working pressure of the port in use.
It is important to limit contamination in the circuit to avoid compromising the function of the internal valves.
Make sure that the medium used is compatible with seal and material as indicated for each series.
In case of doubt please contact Stucchi Technical Support.
The interchangeability is mentioned under the assumption that the manufacturer of the considered products has not changed any dimension.
It is mandatory to carefully read and closely follow the instructions before selecting or using any Stucchi products.
Always refer to the version uploaded in the Instructions and warning section of stucchigroup.com website for the latest release.
For specific, product-related, instructions, please contact Stucchi technical service.

SPARE KIT SEAL & KIT COTTER

Repair kit / OR+BK+EXTERNAL OR		
Body Size	Description	Part Number
5/8”	M VEP15HD	815700738
3/4”	M VEP17HD	815700739
1”	M VEP21HD	815700740
1-1/4”	M VEP25HD	815701319
1-1/2”	M VEP30HD*	815700741

* OR + O-Ring holder

O-Ring in Nitrile
BackUp in Teflon®

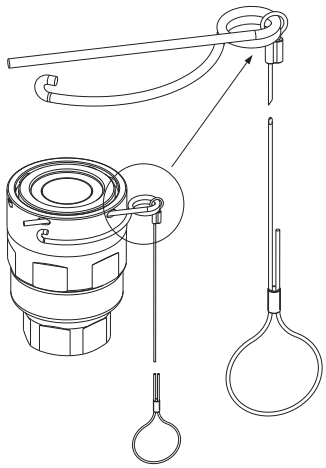

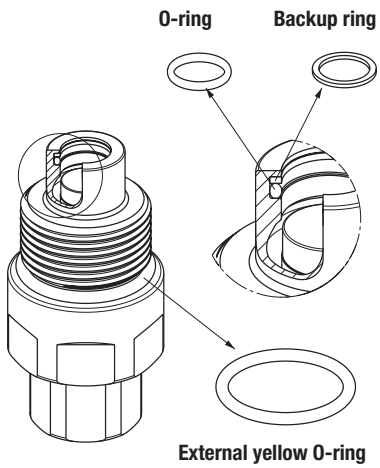

Kit Cotter VEP-HDL version		
Body Size	Description	Part Number

Ask to sales department

PROTECTIVE CAPS FOR VEP-HD SERIES

Protective caps are always recommended to protect the couplings from damage, dirt inclusion, and will increase the product life. This is particularly important in mobile applications where exposure to weather and aggregate materials are common.
Two solutions are available.
- threaded aluminum caps with lanyard (standard colors: natural aluminum, other colors available upon request)
- threaded plastic caps with lanyard (standard color black).

Caps and plugs are also available without lanyard, upon request.

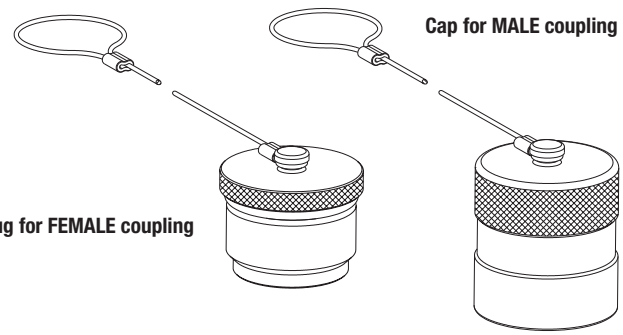

Protective Cap				
Body Size/Description		Part Number		Material/Color
		Plug for Female	Cap for Male	
5/8”	VEP15	815305076	815305077	Aluminum/Natural
3/4”	VEP17	815305078	815305079	Aluminum/Natural
1”	VEP21	815305080	815305081	Aluminum/Natural
1-1/4"	VEP25	815305148	815305149	Aluminium/Natural
1-1/2”	VEP30	815305082	815305083	Aluminum/Natural

Protective Cap				
Body Size/Description		Part Number		Material/Color
		Plug for Female	Cap for Male	
5/8”	VEP15	815303130	815303131	Plastic/Black
3/4”	VEP17	815303132	815303133	Plastic/Black
1”	VEP21	815303134	815303135	Plastic/Black
1-1/4"	VEP25	815303150	815303151	Plastic/Black
1-1/2”	VEP30	815303136	815303137	Plastic/Black

STUCCHI Quick Couplings Catalog - December 2024 - All right reserved.
Texts, data and illustrations mentioned in this catalogue may be changed by Stucchi at any time, without notice; always refer to the version uploaded on the English version of stucchigroup.com/en website for the latest release. In case of doubt, please contact Stucchi technical service.

VP-PSERIES

INTERCHANGE > **Stucchi profile**

Stucchi®

Easy CUP

BOP

TECHNICAL FEATURES AND OPTIONS

Interchange
Stucchi profile

Sealing description
Nitrile NBR

Connection system
Screw

Available sizes
from 1/4" to 1-1/2"

Material /treatment
Carbon steel /Cr3+QPQ (Zn-Ni)

Available threads
BSP - NPT - SAE

Operating pressure
Up to 600 bar

Locking mechanism
Screw to connect + Safety sleeve

Flow rate
Up to 750 l/min

Temperature (°C)
-20°C / +100°C

Valving style
Flat face

Connection under pressure
Connection: Both sides (see Benefits).
Disconnection: Allowed (see Benefits).

BENEFITS

- Easy connection/disconnection with both side under residual pressure thanks to the Stucchi design.
- Flat face is easy to clean, reducing the inclusion of contamination inside the hydraulic circuit.
- Specific dimensions of Stucchi VP-P series are certified with Lloyd Type Approval in accordance with API 16D at specific rating pressure of 345 bar/5000 PSI.
- Minimal fluid spillage during disconnection, reducing fluid spillage to the environment.
- Minimal air inclusion during connection.
- Internal valve design creates minimal pressure drop, maintaining circuit efficiency in the system
- Internal pressure release valve system allows an easy connection with high internal residual pressure.
- The safety sleeve integrated in the connection system prevents the accidental disconnection.
- The modular design allows flexibility with a wide range of configurations.
- High resistance to pressure impulses.
- Safe and simple to use.

HOW TO USE

- Before to connect, clean the mating surface of the couplings to avoid dirt inclusion in the circuit.
- To connect align the female coupling to the male coupling, push the male and twist in one motion to catch the first thread on the female half and continue to thread together (do not push together couplers, screw only).
- The screwing of the threads should be done by hand without the use of the tools for the first part of the connection.
- Always connect male and female with the male adaptor fixed on the hose (male adaptor should not rotate during connection)
- The use of tools for the second part of connection can be necessary if there is high residual pressure in the circuit.
- Thread the mating halves until the sleeve lock clicks into position. This activates the safety lock and eliminates accidental disconnection of the coupling.
- To disconnect push the safety locking sleeve towards the male coupling and unthread the connection.
- The lock is disengaged after one complete rotation of the coupler, continue to unthread until both halves disconnect.
- If safety lock sleeve will not push back rotate the male coupling to couple direction until the sleeve will pull back.

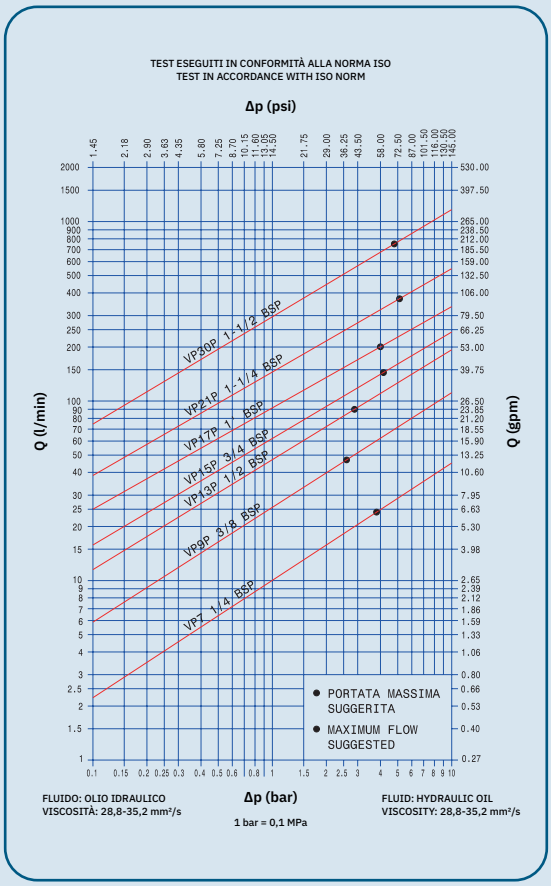

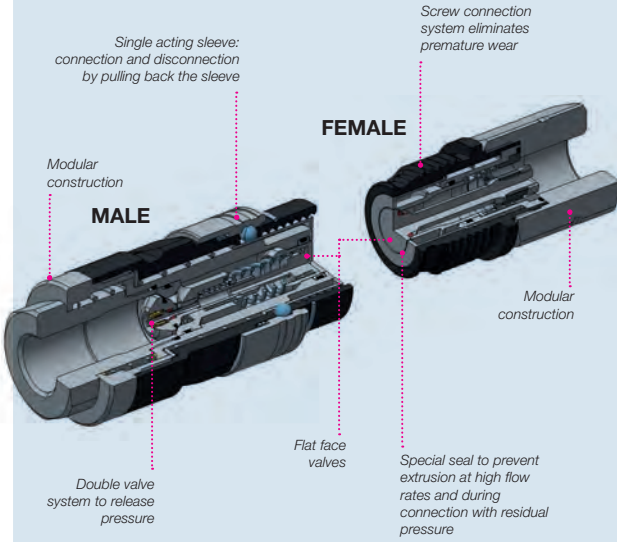

MAIN APPLICATIONS

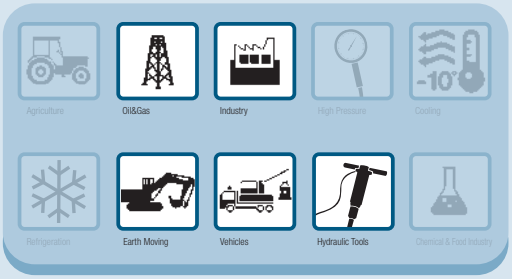

VP-PSERIES

Stucchi®

PERFORMANCES

Size	Series/Size	Max. flow suggested		Manual connect torque		Manual disconnect torque		Spillage*
in		l/min	gpm	Nm	lbf ft	Nm	lbf ft	ml
1/4	VP7	24	6,36	0,6	0,44	0,4	0,29	0,01
3/8	VP9P	46	12,19	0,8	0,59	0,5	0,37	0,04
1/2	VP13P	90	23,85	1,1	0,81	1,0	0,74	0,02
5/8	VP15P	148	39,22	1,1	0,81	1,0	0,74	0,03
3/4	VP17P	200	53,00	2,0	1,47	1,4	1,03	0,01
1	VP21P	378	100,17	2,2	1,62	1,8	1,33	0,06
1-1/2	VP30P	750	198,75	6,5	4,79	3,2	2,36	0,20

Size	Series/Size	Max. operating pressure						Burst pressure					
		Coupled		Male		Female		Coupled		Male		Female	
in		MPa	psi	MPa	psi	MPa	psi	MPa	psi	MPa	psi	MPa	psi
1/4	VP7	60	8700	60	8700	42	6090	150	21750	150	21750	126	18270
3/8	VP9P	55	7975	55	7975	33	4785	140	20300	140	20300	100	14500
1/2	VP13P	55	7975	55	7975	33	4785	140	20300	140	20300	100	14500
5/8	VP15P	55	7975	55	7975	33	4785	140	20300	140	20300	100	14500
3/4	VP17P	50	7250	50	7250	33	4785	125	18125	125	18125	100	14500
1	VP21P	47	6815	47	6815	30	4350	120	17400	120	17400	80	11600
1-1/2	VP30P	40	5800	40	5800	27	3915	110	15950	110	15950	80	11600

Size	Series/Size	Max. residual pressure during connection						Max. residual pressure during disconnection	
		Male, female to drain		Female, male to drain		Male and female			
in		MPa	psi	MPa	psi	MPa	psi	MPa	psi
1/4	VP7	30	4350	25	3625	25	3625	25	3625
3/8	VP9P	25	3625	25	3625	25	3625	25	3625
1/2	VP13P	25	3625	25	3625	20	2900	20	2900
5/8	VP15P	25	3625	25	3625	20	2900	20	2900
3/4	VP17P	25	3625	25	3625	15	2175	15	2175
1	VP21P	25	3625	25	3625	15	2175	15	2175
1-1/2	VP30P	25	3625	25	3625	5	725	5	725

* Spillage is an indicative value of the fluid loss during disconnection (according to ISO norm test method)
Connect torque and disconnect torque without residual pressure.
The torque increase to increasing of internal residual pressure.

BOP Only configurations mentioned in the dedicated BOP section of this catalog are BOP certified.
For complete technical information please contact Stucchi Technical Support.

Note:
VP7 has metal to metal sealing system in the internal valve of male and in the valve of female coupling.

Different possible configurations:
Different threads available upon request.

Temperature range:
Standard seals NBR, PUR, POM from -20 °C to +100 °C (from -4 °F to +212 °F).
Please read carefully Instructions and warnings for proper selection of the products.

Tests performed:
Qualification tests have been performed with hydraulic oil using couplings with NBR (Nitrile) seals.
The max. operating pressure have been verified for 100.000 impulses according to ISO norm test method.

Connection and disconnection with residual pressure in both couplings is recommended for occasional operations only.
For ordinary operations it is suggested to release pressure in one side before to connect and disconnect in way that operator effort and wearing of the couplings are reduced.

⚠ WARNING

A defect, a wrong choice or an improper use of products, can cause injury to persons, animals and objects.
Connect under pressure products are suitable to be connected under residual (static) pressure.
Never connect or disconnect with dynamic pressure (e.g. pump on).
Do not use the female coupling disconnected with high impulse pressure.
Do not couple-uncouple with flow in the circuit.
Do not couple-uncouple when the temperature inside of the circuit is higher than 80 °C (176 °F).
Check the maximum allowable working pressure of the port in use.
It is important to limit contamination in the circuit to avoid compromising the function of the internal valves.
Make sure that the medium used is compatible with seal and material as indicated for each series.
In case of doubt please contact Stucchi Technical Support.
The interchangeability is mentioned under the assumption that the manufacturer of the considered products has not changed any dimension.
It is mandatory to carefully read and closely follow the instructions before selecting or using any Stucchi products.
Always refer to the version uploaded in the Instructions and warning section of stucchigroup.com website for the latest release.
For specific, product-related, instructions, please contact Stucchi technical service.

VP-PSERIES

Stucchi®

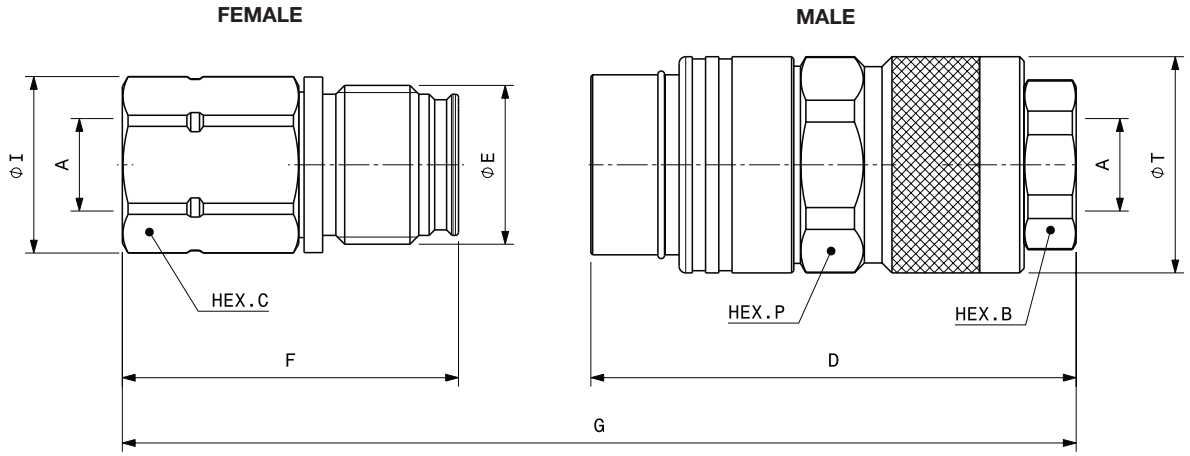

Port description: FEMALE THREAD BSPP (ISO 1179-1)

BODY SIZE	Descriptive Code	Item Code	PORT (A)	E	Overall Length			Length			Hex			Hex			Diameter			Weight	
						mm	in		mm	in		mm	in		mm	in		mm	in	kg	lb
1/4"	F VP7 1/4 BSP	Female 801900000	1/4"	M24x2	G	125,2	4,93	F	52,8	2,08	C	27,0	1,06				I	29,0	1,14	0,16	0,35
	M VP7 1/4 BSP	Male 801900001						D	83,9	3,30	B	22,0	0,87	P	32,0	1,26	T	35,0	1,38	0,39	0,87
3/8"	F VP9P 3/8 BSP	Female 807300002	3/8"	M28x2	G	142,3	5,60	F	64,3	2,53	C	30,0	1,18				I	32,0	1,26	0,24	0,53
	M VP9P 3/8 BSP	Male 807300003						D	94,5	3,72	B	27,0	1,06	P	38,0	1,50	T	42,0	1,65	0,60	1,31
3/8"	F VP9P 1/2 BSP	Female 807300004	1/2"	M28x2	G	147,3	5,80	F	69,3	2,73	C	30,0	1,18				I	32,0	1,26	0,25	0,54
	M VP9P 1/2 BSP	Male 807300005						D	94,5	3,72	B	27,0	1,06	P	38,0	1,50	T	42,0	1,65	0,58	1,27
1/2"	F VP13P 1/2 BSP	Female 807300006	1/2"	M36x3	G	167,9	6,61	F	76,2	3,00	C	36,0	1,42				I	40,0	1,57	0,42	0,93
	M VP13P 1/2 BSP	Male 807300007						D	110,0	4,33	B	36,0	1,42	P	45,0	1,77	T	49,0	1,93	0,98	2,16
1/2"	F VP13P 3/4 BSP	Female 807300008	3/4"	M36x3	G	174,9	6,89	F	83,2	3,28	C	36,0	1,42				I	40,0	1,57	0,44	0,97
	M VP13P 3/4 BSP	Male 807300009						D	110,0	4,33	B	36,0	1,42	P	45,0	1,77	T	49,0	1,93	0,95	2,08
5/8"	F VP15P 3/4 BSP	Female 807300010	3/4"	M39x3	G	174,9	6,89	F	83,4	3,28	C	41,0	1,61				I	44,8	1,76	0,58	1,28
	M VP15P 3/4 BSP	Male 807300011						D	110,0	4,33	B	36,0	1,42	P	48,0	1,89	T	52,0	2,05	1,06	2,33
3/4"	F VP17P 3/4 BSP	Female 807300018	3/4"	M45x3	G	200,5	7,89	F	96,0	3,78	C	46,0	1,81				I	49,8	1,96	0,93	2,05
	M VP17P 3/4 BSP	Male 807300019						D	127,1	5,00	B	46,0	1,81	P	55,0	2,17	T	60,0	2,36	1,64	3,61
3/4"	F VP17P 1 BSP	Female 807300012	1"	M45x3	G	202,5	7,97	F	98,0	3,86	C	46,0	1,81				I	49,8	1,96	0,91	2,00
	M VP17P 1 BSP	Male 807300013						D	127,1	5,00	B	46,0	1,81	P	55,0	2,17	T	60,0	2,36	1,59	3,49
1"	F VP21P 1 BSP	Female 807300022	1"	M55x3	G	213,8	8,42	F	104,0	4,09	C	55,0	2,17				I	59,8	2,35	1,49	3,28
	M VP21P 1 BSP	Male 807300023						D	137,0	5,39	B	55,0	2,17	P	70,0	2,76	T	76,0	2,99	2,65	5,84
1"	F VP21P 1-1/4 BSP	Female 807300014	1-1/4"	M55x3	G	214,8	8,46	F	105,0	4,13	C	55,0	2,17				I	59,8	2,35	1,40	3,08
	M VP21P 1-1/4 BSP	Male 807300015						D	137,0	5,39	B	55,0	2,17	P	70,0	2,76	T	76,0	2,99	2,51	5,53
1-1/2"	F VP30P 1-1/4 BSP	Female 807300024	1-1/4"	M72x4	G	271,3	10,68	F	132,2	5,20	C	65,0	2,56				I	85,0	3,35	-	-
	M VP30P 1-1/4 BSP	Male 807300025						D	174,7	6,88	B	65,0	2,56	P	85,0	3,35	T	94,0	3,70	-	-
1-1/2"	F VP30P 1-1/2 BSP	Female 807300016	1-1/2"	M72x4	G	271,3	10,68	F	132,2	5,20	C	65,0	2,56				I	85,0	3,35	2,93	6,46
	M VP30P 1-1/2 BSP	Male 807300017						D	174,7	6,88	B	65,0	2,56	P	85,0	3,35	T	94,0	3,70	5,12	11,29

Port description: FEMALE THREAD BSPP (ISO 1179-1) - ZincNickel treatment

BODY SIZE	Descriptive Code	Item Code	PORT (A)	E	Overall Length			Length			Hex			Hex			Diameter			Weight	
						mm	in		mm	in		mm	in		mm	in		mm	in	kg	lb
1/4"	F VP7ZN 1/4 BSP	Female 811000000	1/4"	M24x2	G	125,2	4,93	F	52,8	2,08	C	27,0	1,06				E	29,0	1,14	0,16	0,35
	M VP7ZN 1/4 BSP	Male 811000001						D	83,9	3,30	B	22,0	0,87	P	32,0	1,26	T	35,0	1,38	0,39	0,87
1/2"	F VP13PZN 1/2 BSP	Female 811000004	1/2"	M36x3	G	167,9	6,61	F	76,2	3,00	C	36,0	1,42				E	40,0	1,57	0,42	0,93
	M VP13PZN 1/2 BSP	Male 811000005						D	110,0	4,33	B	36,0	1,42	P	45,0	1,77	T	49,0	1,93	0,98	2,16

VP-PSERIES

Stucchi®

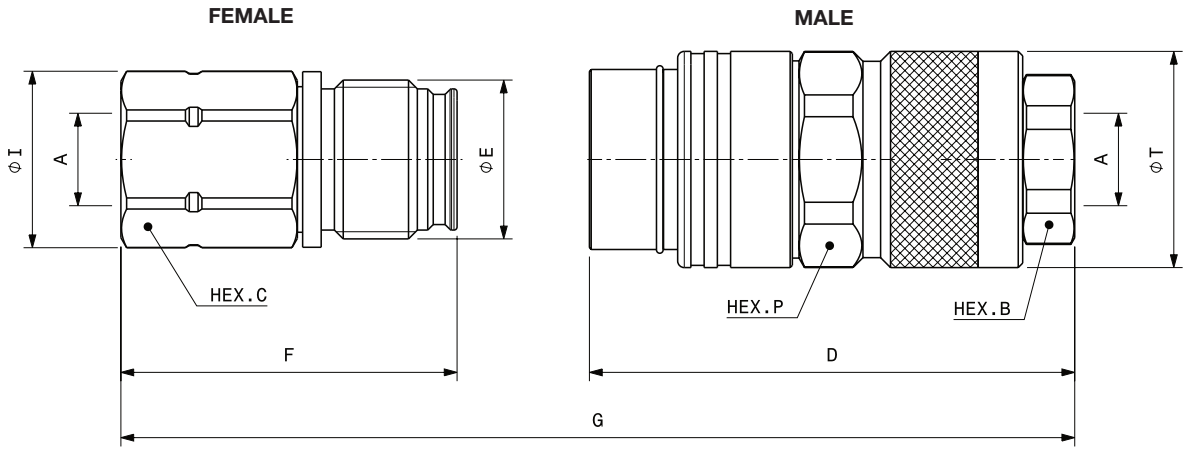

Port description: FEMALE THREAD NPT (ANSI B.1.20.1)

BODY SIZE	Descriptive Code	Item Code		PORT (A)	E	Overall Length			Length			Hex			Hex			Diameter			Weight	
							mm	in		mm	in		mm	in		mm	in		mm	in	kg	lb
1/4"	F VP7 1/4 NPT	Female	801901004	1/4"	M24x2	G	126,6	4,98	F	52,8	2,08	C	27,0	1,06				I	29,0	1,14	0,17	0,36
	M VP7 1/4 NPT	Male	801901005						D	85,3	3,36	B	22,0	0,87	P	32,00	1,26	T	35,0	1,38	0,40	0,87
3/8"	F VP9P 3/8 NPT	Female	807301002	3/8"	M28x2	G	142,3	5,60	F	64,3	2,53	C	30,0	1,18				I	32,0	1,26	0,24	0,53
	M VP9P 3/8 NPT	Male	807301003						D	94,5	3,72	B	27,0	1,06	P	38,00	1,50	T	42,0	1,65	0,59	1,30
3/8"	F VP9P 1/2 NPT	Female	807301004	1/2"	M28x2	G	147,3	5,80	F	69,3	2,73	C	30,0	1,18				I	32,0	1,26	0,24	0,53
	M VP9P 1/2 NPT	Male	807301005						D	94,5	3,72	B	27,0	1,06	P	38,00	1,50	T	42,0	1,65	0,57	1,26
1/2"	F VP13P 1/2 NPT	Female	807301006	1/2"	M36x3	G	167,9	6,61	F	76,2	3,00	C	36,0	1,42				I	40,0	1,57	0,43	0,94
	M VP13P 1/2 NPT	Male	807301007						D	110,0	4,33	B	36,0	1,42	P	45,00	1,77	T	49,0	1,93	0,98	2,16
1/2"	F VP13P 3/4 NPT	Female	807301008	3/4	M36x3	G	174,9	6,89	F	83,2	3,28	C	36,0	1,42				I	40,0	1,57	0,44	0,97
	M VP13P 3/4 NPT	Male	807301009						D	110,0	4,33	B	36,0	1,42	P	45,00	1,77	T	49,0	1,93	0,95	2,08
5/8"	F VP15P 3/4 NPT	Female	807301010	3/4	M39x3	G	174,9	6,89	F	83,4	3,28	C	41,0	1,61				I	44,8	1,76	0,60	1,31
	M VP15P 3/4 NPT	Male	807301011						D	110,0	4,33	B	36,0	1,42	P	48,00	1,89	T	52,0	2,05	1,07	2,35
3/4"	F VP17P 1 NPT	Female	807301012	1	M45x3	G	202,5	7,97	F	98,0	3,86	C	46,0	1,81				I	49,8	1,96	0,92	2,02
	M VP17P 1 NPT	Male	807301013						D	127,1	5,00	B	46,0	1,81	P	55,00	2,17	T	60,0	2,36	1,60	3,53
1"	F VP21P 1-1/4 NPT	Female	807301014	1-1/4	M55x3	G	218,1	8,59	F	108,3	4,26	C	55,0	2,17				I	59,8	2,35	1,43	3,15
	M VP21P 1-1/4 NPT	Male	807301015						D	137,0	5,39	B	55,0	2,17	P	70,00	2,76	T	76,0	2,99	2,53	5,58
1-1/2"	F VP30P 1-1/2 NPT	Female	807301016	1-1/2	M72x4	G	271,3	10,68	F	132,2	5,20	C	65,0	2,56				I	85,0	3,35	2,93	6,46
	M VP30P 1-1/2 NPT	Male	807301017						D	174,7	6,88	B	65,0	2,56	P	85,00	3,35	T	94,0	3,70	5,10	11,24

VP-PSERIES

Stucchi®

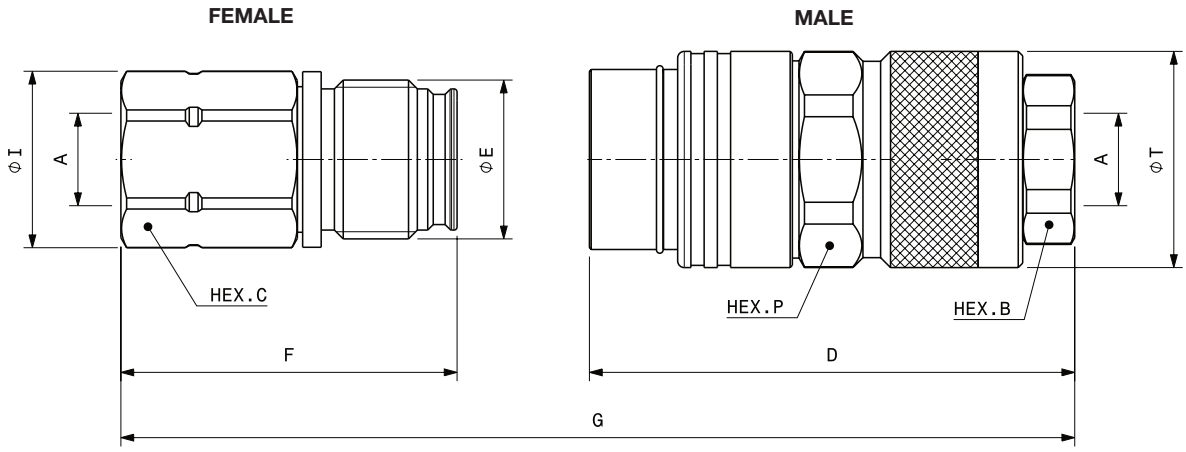

Port description: FEMALE THREAD SAE (ISO 11926-1 & SAE J1926-1)

BODY SIZE	Descriptive Code	Item Code		PORT (A)	E	Overall Length			Length			Hex			Hex			Diameter			Weight	
							mm	in		mm	in		mm	in		mm	in		mm	in	kg	lb
3/8"	F VP9P 3/8 SAE	Female	807304020	9/16-18UNF	M28x2	G	142,3	5,60	F	64,3	2,53	C	30,0	1,18				I	32,0	1,26	0,25	0,54
	M VP9P 3/8 SAE	Male	807304021						D	94,5	3,72	B	27,0	1,06	P	38,00	1,50	T	42,0	1,65	0,60	1,32
1/2"	F VP13P 1/2 SAE	Female	807304022	3/4-16UNF	M36x3	G	169,9	6,69	F	76,2	3,00	C	36,00	1,42				I	40,0	1,57	0,43	0,95
	M VP13P 1/2 SAE	Male	807304023						D	110,0	4,33	B	36,00	1,42	P	45,00	1,77	T	49,0	1,93	0,93	2,05
1/2"	F VP13P 3/4 SAE	Female	807304008	1-1/16-12UN	M36x3	G	174,9	6,89	F	83,2	3,28	C	36,0	1,42				I	40,0	1,57	0,43	0,95
	M VP13P 3/4 SAE	Male	807304009						D	110,0	4,33	B	36,0	1,42	P	45,00	1,77	T	49,0	1,93	0,93	2,05
5/8"	F VP15P 3/4 SAE	Female	807304010	1-1/16-12UN	M39x3	G	174,9	6,89	F	83,4	3,28	C	41,0	1,61				I	44,8	1,76	0,58	1,27
	M VP15P 3/4 SAE	Male	807304011						D	110,0	4,33	B	36,0	1,42	P	48,00	1,89	T	52,0	2,05	1,05	2,30
3/4"	F VP17P 1 SAE	Female	807304012	1-5/16-12UN	M45x3	G	202,5	7,97	F	98,0	3,86	C	46,0	1,81				I	49,8	1,96	0,90	1,97
	M VP17P 1 SAE	Male	807304013						D	127,1	5,00	B	46,0	1,81	P	55,00	2,17	T	60,0	2,36	1,58	3,48
1"	F VP21P 1-1/4 SAE	Female	807304014	1-5/8-12UN	M55x3	G	214,8	8,46	F	105,0	4,13	C	55,0	2,17				I	59,8	2,35	1,40	3,09
	M VP21P 1-1/4 SAE	Male	807304015						D	137,0	5,39	B	55,0	2,17	P	70,00	2,76	T	76,0	2,99	2,50	5,51
1-1/2"	F VP30P 1-1/2 SAE	Female	807304016	1-7/8-12UN	M72x4	G	271,3	10,68	F	132,2	5,20	C	65,0	2,56				I	85,0	3,35	2,92	6,44
	M VP30P 1-1/2 SAE	Male	807304017						D	174,7	6,88	B	65,0	2,56	P	85,00	3,35	T	94,0	3,70	5,10	11,24

Port description: FEMALE THREAD SAE (ISO 11926-1 & SAE J1926-1) - ZincNickel treatment

BODY SIZE	Descriptive Code	Item Code		PORT (A)	E	Overall Length			Length			Hex			Hex			Diameter			Weight	
							mm	in		mm	in		mm	in		mm	in		mm	in	kg	lb
1/2"	F VP13PZN 1/2 SAE	Female	811004004	3/4-16UNF	M36x3	G	169,9	6,69	F	76,2	3,00	C	36,0	1,42				E	40,0	1,57	0,43	0,95
	M VP13PZN 1/2 SAE	Male	811004005						D	110,0	4,33	B	36,0	1,42	P	45,0	1,77	T	49,0	1,95	0,93	2,05
5/8"	FVP15PZN 3/4 SAE	Female	811004010	1-1/16-12UN	M39x3	G	174,9	6,89	F	83,4	3,28	C	41,00	1,61				E	44,8	1,76	0,58	1,27
	M VP15PZN 3/4 SAE	Male	811004011						D	110,0	4,33	B	36,00	1,42	P	48,0	1,89	T	52,0	2,05	1,05	2,30
3/4"	F VP17PZN 1 SAE	Female	811004012	1-5/16-12U	M45x3	G	202,5	7,97	F	98,0	3,86	C	46,0	1,81				E	49,8	1,96	0,90	1,97
	M VP17PZN 1 SAE	Male	811004013						D	127,1	5,00	B	46,0	1,81	P	55,0	2,17	T	60,0	2,36	1,58	3,48

SPARE KIT SEAL FOR MALE

Repair kit / OR+BK		
Body Size	Description	Part Number
1/4”	M VP7	815700519
3/8”	M VP9P	815701096
1/2”	M VP13P	815700339
5/8”	M VP15P	815700341
3/4”	M VP17P	815700655
1”	M VP21P	815700345
1-1/2”	M VP30P*	815700697

* Kit replacement O-Ring Holder + O-Ring

O-Ring in NBR
BackUp in Teflon®

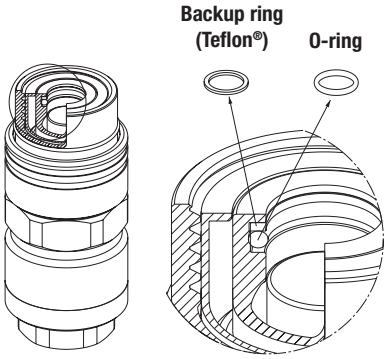

PROTECTIVE CAPS FOR VP-P SERIES

Protective caps are always recommended to protect the couplings from damage, dirt inclusion, and will increase the product life. This is particularly important in mobile applications where exposure to weather and aggregate materials are common.
For the VP-P series aluminum screw caps complete with lanyard are available (standard colors: natural aluminum, other colors available upon request).
Caps and plugs are also available without lanyard, upon request.

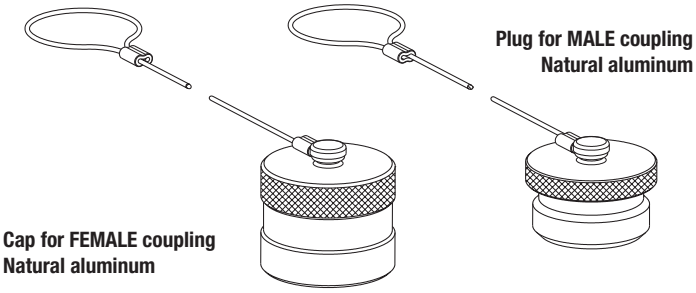

Protective Cap				
Body Size/Description		Part Number		Material/Color
		Cap for Female	Plug for Male	
1/4”	VP7	815305050	815305051	Aluminum/Natural
3/8”	VP9P	815305052	815305053	Aluminum/Natural
1/2”	VP13P	815305054	815305055	Aluminum/Natural
5/8”	VP15P	815305056	815305057	Aluminum/Natural
3/4”	VP17P	815305058	815305059	Aluminum/Natural
1”	VP21P	815305060	815305061	Aluminum/Natural
1-1/2”	VP30P	815305062	815305063	Aluminum/Natural

STUCCHI Quick Couplings Catalog - December 2024 - All right reserved.
Texts, data and illustrations mentioned in this catalogue may be changed by Stucchi at any time, without notice; always refer to the version uploaded on the English version of stucchigroup.com/en website for the latest release. In case of doubt, please contact Stucchi technical service.

Casting

SATURN 3 p. 117

Valving style: Flat face
Interchange: ISO 16028
Sealing description: Nitrile NBR
Available sizes: From 1/2'' to 3/4''
Operating pressure: Up to 350 bar
Flow rate: Up to 200 l/min
Material / Treatment:
Carbon steel / Cr3
Connection under pressure:
One side only

SATURN3SERIES

INTERCHANGE > **ISO 16028**

Stucchi®

Easy CUP

TECHNICAL FEATURES AND OPTIONS

Interchange
ISO 16028

Sealing description
Nitrile NBR

Connection system
Push

Available sizes
from 1/2" to 3/4"

Material /treatment
Carbon steel /Cr3

Available threads
SAE - JIC

Operating pressure
Up to 350 bar

Locking mechanism
Locking ball + Safety Lock

Flow rate
Up to 200 l/min

Temperature (°C)
-20°C / +100°C

Valving style
Flat face

Connection under pressure
Connection: One side - Both sides if use with APM/ AHD (see Benefits). Disconnection: Allowed (see Benefits).

BENEFITS

- Stucchi design pressure relief system completely independent of the connections prevents accidental release of pressure during the operation.
- User friendly pressure relief system (knob) allows for easy connection and disconnection with residual pressure.
- Please use in conjunction with APM series or AHD series to be able to connect with the matching side (attachment) under residual pressure.
- Low cost field replacement spare kits for couplers and valve.
- Flat face is easy to clean, reducing the inclusion of contamination to the hydraulic circuit.
- Minimal fluid spillage during disconnection, reducing fluid spillage to the environment.
- Minimal air inclusion during connection.
- Internal valve design creates minimal pressure drop, maintaining circuit efficiency in the system
- Good resistance to pressure impulses.
- Compact slim and flexible design (possible to use different sizes of couplings).
- Safe and simple to use.
- Bracket for electrical connector (kit plate + screw included in the box).

HOW TO USE

- Before to connect, clean the mating surface of the couplings to avoid dirt inclusion in the circuit.
- Drain the residual pressure pulling the knob out and up to drain the residual pressure of upper coupling, down to drain the residual pressure of lower coupling.
- To connect push the male half towards the female half or viceversa.
- After connection turn the external sleeve to engage safety lock function, to prevent accidental disconnection.
- To disconnect pull back the sleeve of the female
- In case of residual pressure, before uncoupling drain the residual pressure pulling the knob out and up to drain the residual pressure of upper coupling, down to drain the residual pressure of lower coupling.

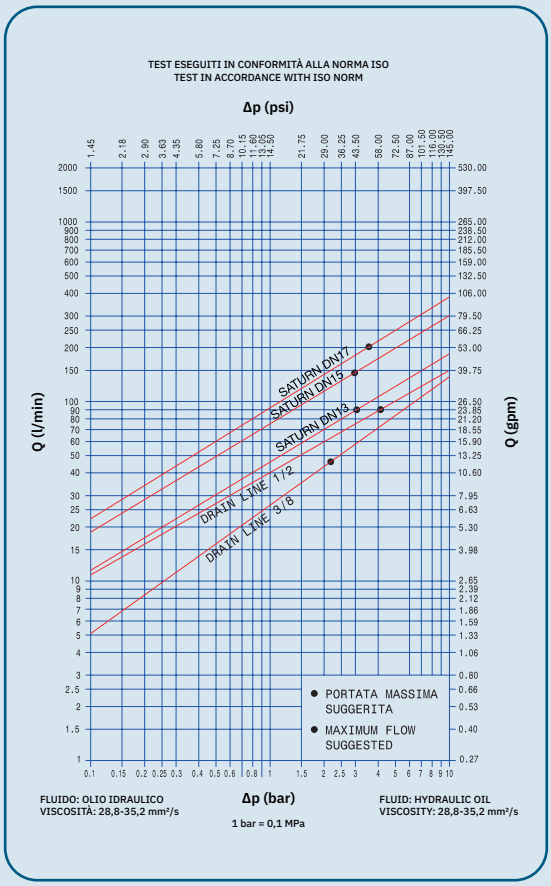

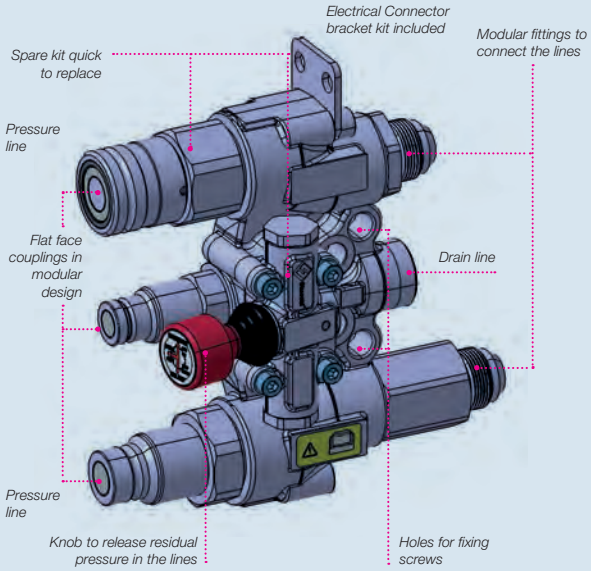

MAIN APPLICATIONS

SATURN3SERIES

Stucchi®

PERFORMANCES

Size		Series/Size	Max. flow suggested		Spillage*
in	mm (ISO)		l/min	gpm	ml
1/2	12,5	SATURN 3 DN13	90	23,85	0,02
5/8	16	SATURN 3 DN15	148	39,22	0,03
3/4	19	SATURN 3 DN17	200	53	0,03

Size	Series/Size	Max. operating pressure						Max. residual pressure			
		Coupled		Male		Female		Male		Female	
in		MPa	psi	MPa	psi	MPa	psi	MPa	psi	MPa	psi
1/2	SATURN 3 DN13	35	5075	33	4785	33	4785	25	3625	25	3625
5/8	SATURN 3 DN15	35	5075	33	4785	33	4785	25	3625	25	3625
3/4	SATURN 3 DN17	35	5075	33	4785	33	4785	25	3625	25	3625

* Spillage is an indicative value of the fluid loss during disconnection (according to ISO norm test method).

Different possible configurations:
See specific table in the following page.
Saturn 3 can be configurated with VEP, VP, VEP-HD cartridges upon request.

Temperature range:
Seals in NBR (Nitrile): from -20 °C to +100 °C (from -4 °F to +212 °F).
Please read carefully Instructions and warnings for proper selection of the products.

Tests:
Qualification tests have been performed with hydraulic oil using couplings with NBR (Nitrile) seals.
The max. operating pressure have been verified for 1.000.000 impulses according to ISO norm test method.

⚠ WARNING

A defect, a wrong choice or an improper use of products, can cause injury to persons, animals and objects.
Connect under pressure products are suitable to be connected under residual (static) pressure.
Never connect or disconnect with dynamic pressure (e.g. pump on).
Do not relieve pressure:
- When the attachment is not in the rest position
- During operation of the attachment (due to danger of unexpected movement of the attachment)

Connection with residual pressure (pressure trapped in the circuit) allowed with one side to drain.
Do not use the female coupling disconnected with high impulse pressure.
Do not couple-uncouple with flow in the circuit.
Do not couple-uncouple when the temperature inside of the circuit is higher than 80 °C (176 °F).
Check the maximum allowable working pressure of the port in use.
It is important to limit contamination in the circuit to avoid compromising the function of the internal valves.
Make sure that the medium used is compatible with seal and material as indicated for each series.
In case of doubt please contact Stucchi Technical Support.
The interchangeability is mentioned under the assumption that the manufacturer of the considered products has not changed any dimension.
It is mandatory to carefully read and closely follow the instructions before selecting or using any Stucchi products.
Always refer to the version uploaded in the Instructions and warning section of stucchigroup.com website for the latest release.
For specific, product-related, instructions, please contact Stucchi technical service.

HOW IT WORKS

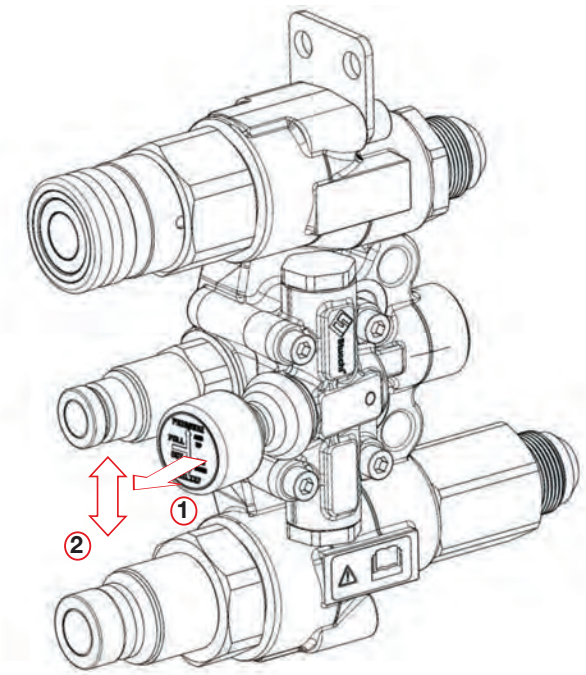

To release the pressure:

1 Pull the lever

+

2 Push up to release the pressure on the upper line
Push down to release the pressure on the lower line

HYDRAULIC CIRCUIT

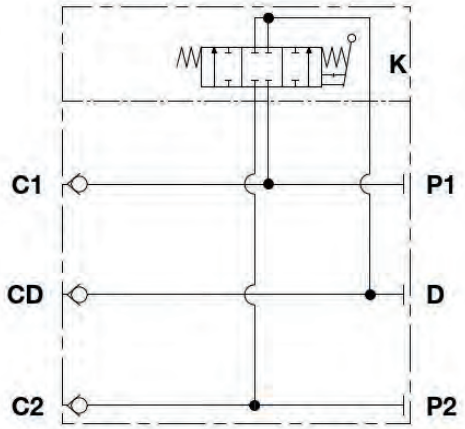

HOW TO ORDER, PRODUCT DEFINITION

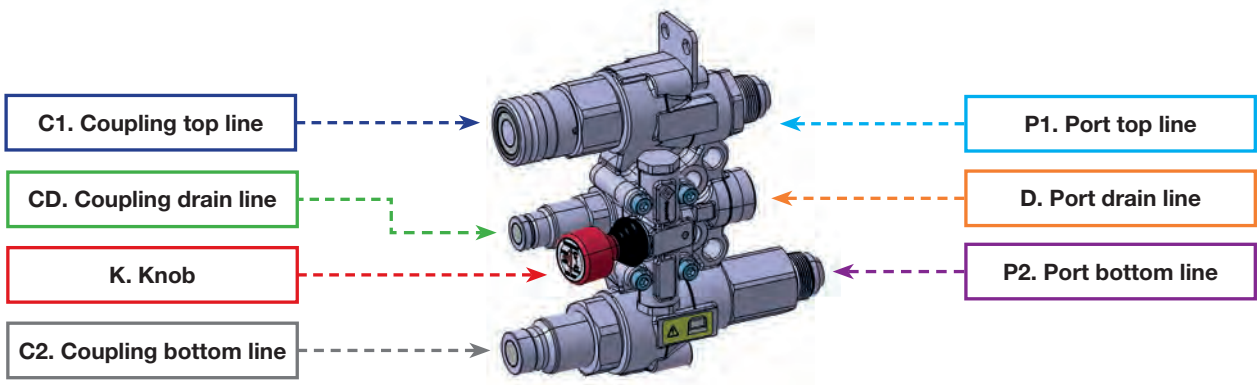

Descriptive Code	Item Code	Lever Side	C1. Coupling top line		CD. Coupling drain line		C2. Coupling bottom line		P1. Port top line	P2. Port bottom line
SATURN 3 RIGHT MF A13-M A9	**808800102**	LEFT	MALE DN13	1/2"	MALE DN9	3/8"	FEMALE DN13	1/2"	3/4" JIC (long adaptor)	3/4" JIC (short adaptor)
SATURN 3 RIGHT MF A15-M A9	**808800103**	LEFT	MALE DN15	5/8"	MALE DN9	3/8"	FEMALE DN15	5/8"	3/4" JIC (long adaptor)	3/4" JIC (short adaptor)
SATURN 3 RIGHT MF A17-M A13	**808800104**	LEFT	FEMALE DN17	3/4"	MALE DN13	1/2"	MALE DN17	3/4"	3/4" JIC (long adaptor)	3/4" JIC (short adaptor)
SATURN 3 RIGHT MF A17-M A9	**808800105**	LEFT	FEMALE DN17	3/4"	MALE DN9	3/8"	MALE DN17	3/4"	3/4" JIC (long adaptor)	3/4" JIC (short adaptor)
SATURN 3 LEFT MF A17-M A9-NO ADAPTERS	**808800106**	RIGHT	MALE DN17	3/4"	MALE DN9	3/8"	FEMALE DN17	3/4"	3/4" SAE	3/4" SAE
SATURN 3 LEFT MF A13-PLUG-NO ADAPTERS	**808800107**	RIGHT	MALE DN13	1/2"	PLUGGED		FEMALE DN13	1/2"	3/4" SAE	3/4" SAE
SATURN 3 LEFT MF A13-M A9-SHORT ADAPTERS	**808800108**	RIGHT	MALE DN13	1/2"	MALE DN9	3/8"	FEMALE DN13	1/2"	3/4" JIC (short adaptor)	3/4" JIC (short adaptor)
SATURN 3 LEFT MF A13-M A9	**808800121**	LEFT	MALE DN13	1/2"	MALE DN9	3/8"	FEMALE DN13	1/2"	3/4" JIC (long adaptor)	3/4" JIC (short adaptor)

SATURN3SERIES

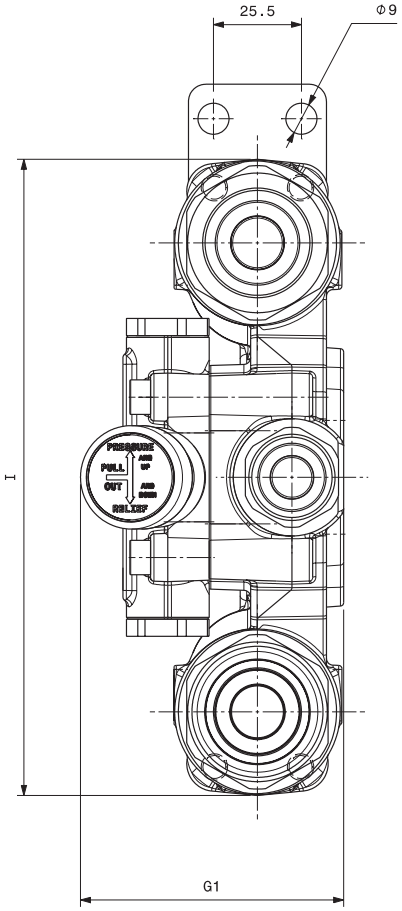

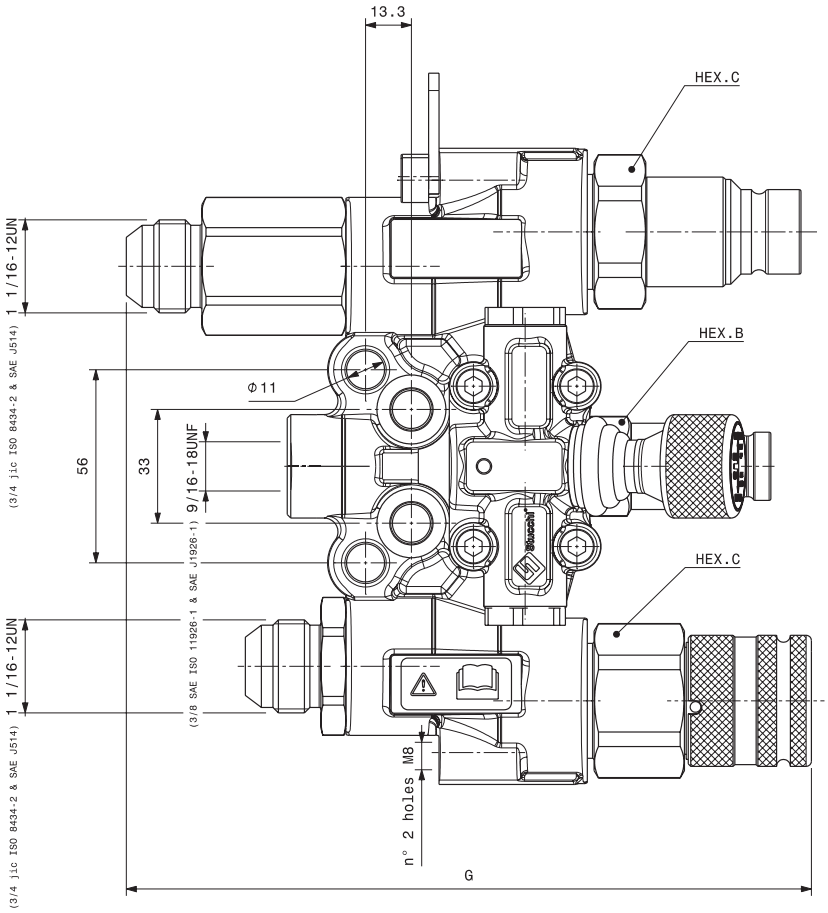

Descriptive Code	Length			Length			Length			Hex			Hex			Weight	
		mm	in		mm	in		mm	in		mm	in		mm	in	kg	lb
SATURN 3 DN13	G	196,8	7,75	G1	76,0	2,99	I	184,0	7,24	C	41,0	1,61	B	27,0	1,06	4,31	9,51
SATURN 3 DN15	G	203,7	7,75	G1	76,0	2,99	I	184,0	7,24	C	41,0	1,61	B	27,0	1,06	4,44	9,78
SATURN 3 DN17	G	224,0	7,75	G1	76,0	2,99	I	184,0	7,24	C	46,0	1,81	B	32,0	1,26	5,05	11,14

SPARE KIT SEAL FOR MALE

Repair kit / OR+BK		
Body Size	Description	Part Number
3/8”	M A9 (drain line)	815700337
1/2”	MALE DIN13	815700339
5/8”	MALE DIN15	815700341
3/4”	MALE DIN17	815700343

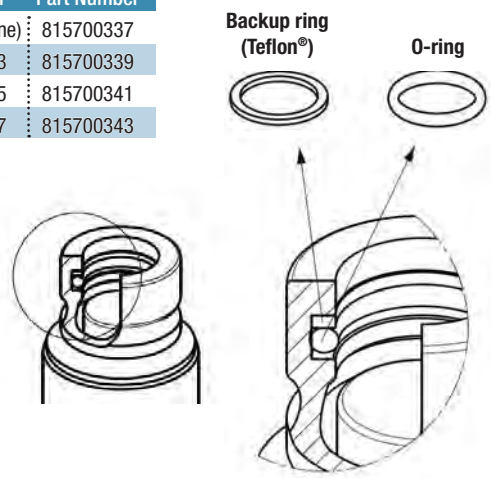

O-Ring in NBR
BackUp in Teflon®

REPAIR KIT FOR SATURN SERIES

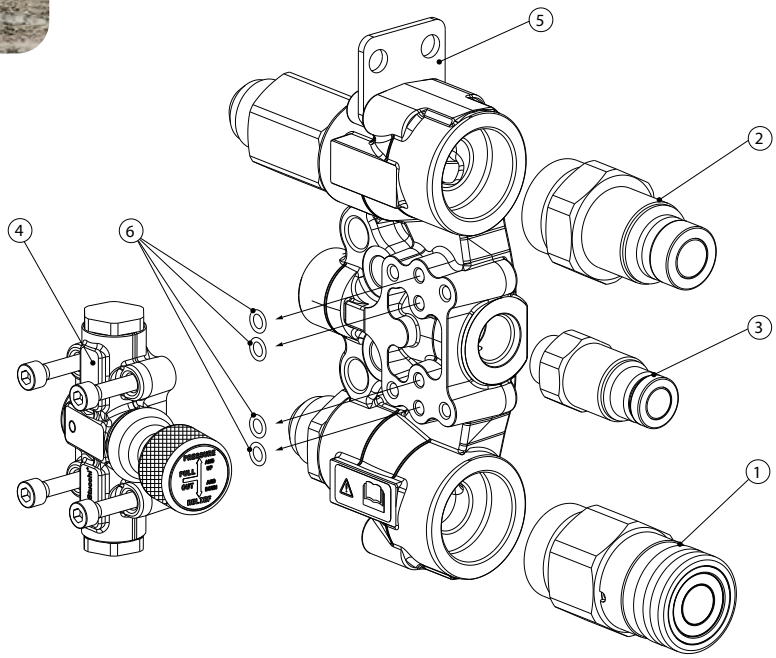

Repair kit				
Body Size	Descriptive Code	Part Number	A NEW	Legend
1/2”	CARTRIDGE F A13HDSP 1 ORFS (DIN13)	808313038		1
1/2”	CARTRIDGE M A13HD 1 ORFS (DIN13)	808313001		2
5/8”	CARTRIDGE F A15HDS 1 ORFS (DIN15)	808313032		1
5/8”	CARTRIDGE M A15HD 1 ORFS (DIN15)	808313003		2
3/4”	CARTRIDGE F A17 1 ORFS (DIN17)	801313010	812513026	1
3/4”	CARTRIDGE M A17 1 ORFS (DIN17)	801313011	812513027	2
3/8”	CARTRIDGE M A9 1/2 SAE EXT	801304033		3
1/2”	CARTRIDGE M A13RN 1/2 SAE EXT	801304049		3
-	CARTRIDGE REPAIR KIT VALVE GROUP	815700866		4
-	SPARE KIT BRACKET AND SCREWS FOR SATURN 3	815700865		5
-	SPARE KIT SEALS FOR VALVE SATURN 3	815701321		6

Male or Female coupling can be mounted indifferently either on the top or bottom port

STUCCHI Quick Couplings Catalog - December 2024 - All right reserved.
Texts, data and illustrations mentioned in this catalogue may be changed by Stucchi at any time, without notice; always refer to the version uploaded on the English version of stucchigroup.com/en website for the latest release. In case of doubt, please contact Stucchi technical service.

Poppet Screw

VD p. 125

Valving style: Poppet
Interchange: ISO 14541
Sealing description: Nitrile NBR
Available sizes: From 1/4” to 1-1/4”
Operating pressure: Up to 450 bar
Flow rate: Up to 378 l/min
Material / Treatment:
Carbon steel / Cr3
Connection under pressure:
One side only

BOP

VOF p. 135

Valving style: Poppet
Interchange: With similar couplings
Sealing description: Nitrile NBR
Available sizes: From 3/4” to 2”
Operating pressure: Up to 345 bar
Flow rate: Up to 1100 l/min
Material / Treatment:
Carbon steel / Cr3
Connection under pressure:
One side only

BOP

VOFX p. 141

Valving style: Poppet
Interchange: With similar couplings
Sealing description: Nitrile NBR
Available sizes: From 3/4” to 2”
Operating pressure: Up to 207 bar
Flow rate: Up to 1100 l/min
Material / Treatment:
Stainless steel (AISI 316L)
Connection under pressure:
One side only

VR p. 147

Valving style: Flat face non-spill
Interchange: With Rohrleitung couplings
Sealing description: Nitrile NBR
Available sizes: From 3/8” to 1-1/4”
Operating pressure: Up to 420 bar
Flow rate: Up to 576 l/min
Material / Treatment:
Carbon steel / Cr3
Connection under pressure:
One side only

VDSERIES

INTERCHANGE > **ISO 14541**

Stucchi®

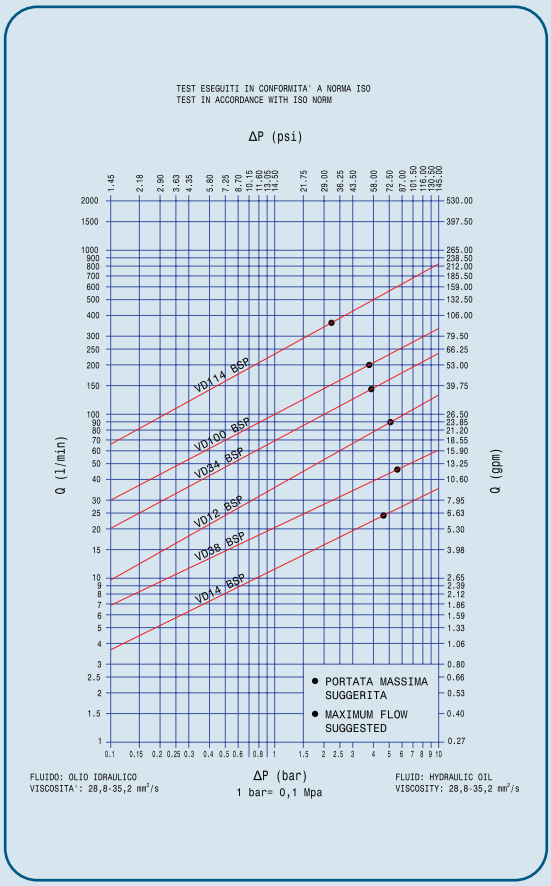

TECHNICAL FEATURES AND OPTIONS

Interchange
ISO 14541

Sealing description
Nitrile NBR

Connection system
Screw

Available sizes
from 1/4" to 1-1/4"

Material /treatment
Carbon steel /Cr3

Available threads
BSP - METRIC

Operating pressure
Up to 450 bar

Locking mechanism
Screw to connect

Flow rate
Up to 378 l/min

Temperature (°C)
-20°C / +100°C

Valving style
Poppet

Connection under pressure
Connection: one side
Disconnection: not allowed

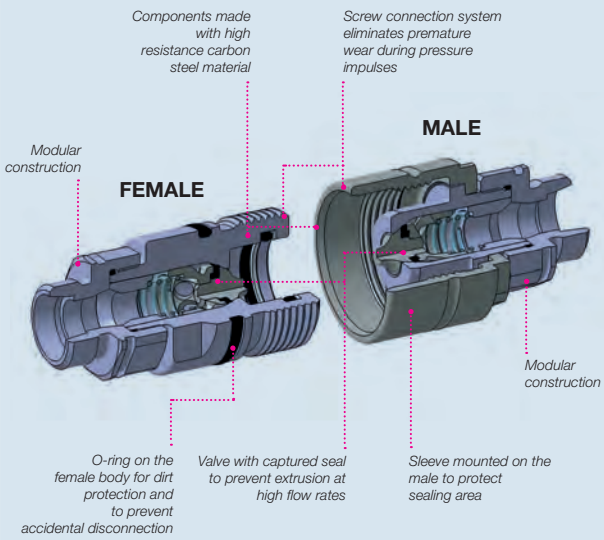

BENEFITS

- Connection is allowed with residual pressure in one side of the coupling (max 10 MPa in one side).
- The poppet valve with elastomer seal provides maximum sealing of the couplings when disconnected.
- Shape of internal parts is designed to reduce turbulence and pressure drop.
- The modular design allows for broad range of port configurations.
- External o-ring indicates if the product is fully connected, prevent accidental disconnection and protect coupling against dirt.
- Male body sealing surface protected by the threaded sleeve.
- High resistance to pressure impulses.
- Compact design.
- Simple to use.

HOW TO USE

- Before to connect, clean the mating surface of the couplings to avoid dirt inclusion in the circuit.
- To connect insert the male coupling in the female coupling, screw the sleeve till its positive stop, do not push together the couplings, screw only.
- The use of tools for the second part of the connection can be necessary if there is high residual pressure in the circuit.
- Check that the external O-ring is fully covered.
- To disconnect unscrew totally the sleeve from the female coupling.

MAIN APPLICATIONS

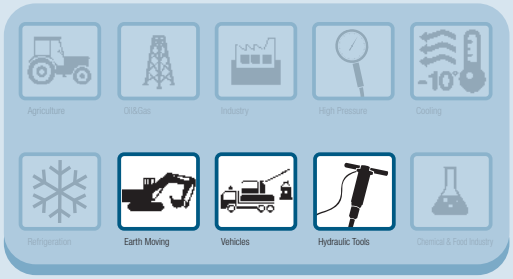

Stucchi®

PERFORMANCES

Size		Series/Size	BG	Max. flow suggested		Manual connect torque*		Manual disconnect torque*		Spillage**
in	mm (ISO)			l/min	gpm	Nm	lbf ft	Nm	lbf ft	ml
1/4	6,3	VD14	1	24	6,36	0,8	0,59	0,5	0,37	0,7
3/8	10	VD38	2	46	12,19	1,0	0,74	0,5	0,37	1
1/2	12,5	VD12	3	90	23,85	1,5	1,11	1,2	0,88	3
3/4	20	VD34	4	148	39,22	2,5	1,84	2,2	1,62	5
1	-	VD100	6	200	53,00	2,7	1,99	2,2	1,62	14
1-1/4	-	VD114	8	378	100,17	5,0	3,69	5,0	3,69	51

Size	Series/Size	Max. operating pressure						Burst pressure					
		Coupled		Male		Female		Coupled		Male		Female	
in		MPa	psi	MPa	psi	MPa	psi	MPa	psi	MPa	psi	MPa	psi
1/4	VD14	45	6525	45	6525	45	6525	160	17400	140	20300	160	20300
3/8	VD38	45	6525	45	6525	45	6525	140	17400	120	17400	140	17400
1/2	VD12	40	5800	40	5800	40	5800	140	17400	120	17400	120	17400
3/4	VD34	40	5800	40	5800	40	5800	100	14500	100	14500	100	14500
1	VD100	30	4350	30	4350	30	4350	100	14500	100	14500	100	14500
1-1/4	VD114	30	4350	30	4350	30	4350	100	14500	100	14500	100	14500

* Connect torque and disconnect torque without residual pressure. The torque will increase as internal residual pressure increases.

** Spillage is an indicative value of the fluid loss during disconnection (according to ISO norm test method).

Different possible configurations:
Different threads available upon request.
For size 1" and 1-1/4" standard external sleeve is hexagonal; external sleeve rounded with knurling is available upon request.

Temperature range:
Standard seals NBR (Nitrile): from -20 °C to +100 °C (from -4 °F to +212 °F).
Please read carefully Instructions and warnings for proper selection of the products.

Tests performed:
Qualification tests have been performed with hydraulic oil using couplings with NBR (Nitrile) seals.
The max. operating pressure have been verified fo 500.000 impulses according to ISO norm test method.

⚠ WARNING

A defect, a wrong choice or an improper use of products, can cause injury to persons, animals and objects.
Never connect or disconnect with dynamic pressure (e.g. pump on).
Do not couple-uncouple with flow in the circuit.
Do not couple-uncouple when the temperature inside of the circuit is higher than 80 °C (176 °F).
Do not use the coupling disconnected with high impulse pressure.
Connect under pressure products are suitable to be connected under residual (static) pressure.
Connection with residual pressure (pressure trapped in the circuit) allowed with other side coupling to drain.
Check the maximum allowable working pressure of the port in use.
Make sure that the medium used is compatible with seal and material as indicated for each series.
In case of doubt please contact Stucchi Technical Support.
The interchangeability is mentioned under the assumption that the manufacturer of the considered products has not changed any dimension.
It is mandatory to carefully read and closely follow the instructions before selecting or using any Stucchi products.
Always refer to the version uploaded in the Instructions and warning section of stucchigroup.com website for the latest release.
For specific, product-related, instructions, please contact Stucchi technical service.

Stucchi®

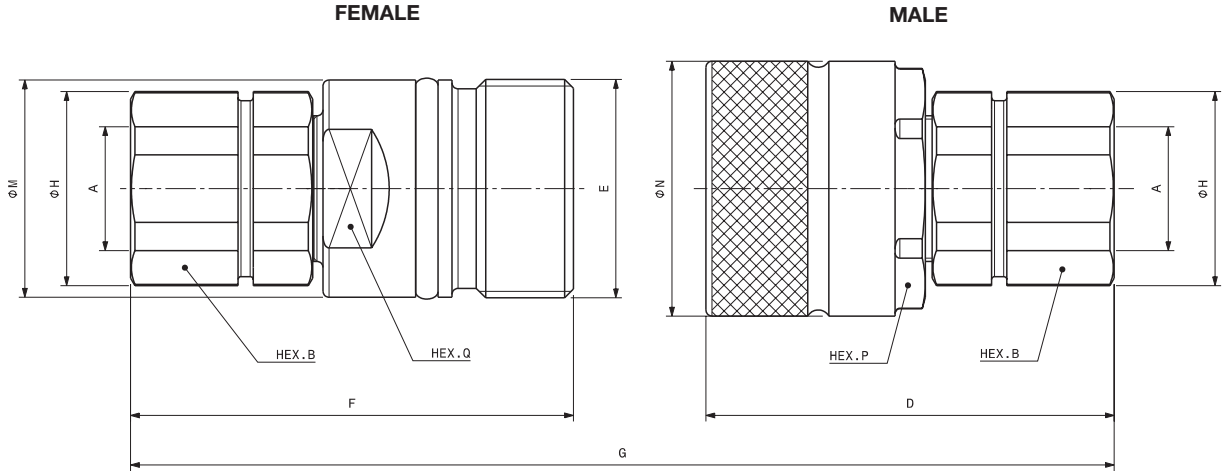

Port description: FEMALE THREAD BSPP (ISO 1179-1)

BODY SIZE	Descriptive Code	Item Code		ISO DN	BG	PORT (A)	E	Overall Length			Length			Hex			Diameter			Hex			Diameter			Weight	
									mm	in		mm	in		mm	in		mm	in		mm	in		mm	in	kg	lb
1/4"	F VD14 BSP	Female	809500006	6,3	1	1/4"	M24X2	G	94,5	3,72	F	61,7	2,44	B	19,0	0,75	M	23,8	0,94	Q	22,0	0,87	H	21,0	0,83	0,13	0,28
	M VD14 BSP	Male	809500007								D	58,5	2,31				N	30,0	1,18	P	27,0	1,06				0,14	0,31
3/8"	F VD38-14 BSP	Female	809500008	10	2	1/4"	M28X2	G	99,0	3,90	F	64,3	2,53	B	22,0	0,87	M	27,8	1,09	Q	24,0	0,94	H	24,0	0,94	0,19	0,41
	M VD38-14 BSP	Male	809500009								D	61,5	2,43				N	34,0	1,34	P	30,0	1,18				0,19	0,41
3/8"	F VD38 BSP	Female	809500010	10	2	3/8"	M28X2	G	105,0	4,13	F	67,3	2,65	B	22,0	0,87	M	27,8	1,09	Q	24,0	0,94	H	24,0	0,94	0,19	0,18
	M VD38 BSP	Male	809500011								D	64,5	2,55				N	34,0	1,34	P	30,0	1,18				0,19	0,41
1/2"	F VD12-38 BSP	Female	809500000	12,5	3	3/8"	M36X2	G	102,6	4,04	F	68,0	2,68	B	30,0	1,18	M	35,8	1,41	Q	30,0	1,18	H	32,0	1,26	0,35	0,77
	M VD12-38 BSP	Male	809500001								D	62,3	2,45				N	42,0	1,65	P	36,0	1,42				0,30	0,66
1/2"	F VD12 BSP	Female	809500002	12,5	3	1/2"	M36X2	G	112,6	4,43	F	73,0	2,87	B	30,0	1,18	M	35,8	1,41	Q	30,0	1,18	H	32,0	1,26	0,34	0,74
	M VD12 BSP	Male	809500003								D	67,3	2,65				N	42,0	1,65	P	36,0	1,42				0,29	0,63
3/4"	F VD34-12 BSP	Female	809500014	20	4	1/2"	M42X2	G	117,5	4,63	F	79,4	3,13	B	36,0	1,42	M	41,8	1,65	Q	36,0	1,42	H	40,0	1,57	0,54	1,19
	M VD34-12 BSP	Male	809500015								D	69,9	2,76				N	49,5	1,89	P	46,0	1,81				0,48	1,05
3/4"	F VD34 BSP	Female	809500016	20	4	3/4"	M42X2	G	129,3	5,09	F	85,3	3,36	B	36,0	1,42	M	41,8	1,65	Q	36,0	1,42	H	40,0	1,57	0,55	1,21
	M VD34 BSP	Male	809500017								D	75,8	2,99				N	49,5	1,89	P	46,0	1,81				0,43	0,95
1"	F VD100-34 BSP	Female	809500018	25	6	3/4"	48X3 SP*	G	139,7	5,50	F	95,5	3,76	B	41,0	1,61	M	47,8	1,88	Q	41,0	1,61	H	45,0	1,77	0,75	1,64
	M VD100-34 BSP	Male	809500019								D	79,0	3,11				N	60 CH 55**	2.36 CH2.16**	P	55,0	2,16				0,65	1,43
1"	F VD100 BSP	Female	809500020	25	6	1"	48X3 SP*	G	150,7	5,93	F	101,0	3,98	B	41,0	1,61	M	47,8	1,88	Q	41,0	1,61	H	45,0	1,77	0,74	1,63
	M VD100 BSP	Male	809500021								D	84,5	3,33				N	60 CH 55**	2.36 CH2.16**	P	55,0	2,16				0,64	1,41
1-1/4"	F VD114 BSP	Female	809500022	31,5	8	1 - 1/4"	70X3 SP*	G	189,0	7,44	F	117,2	4,61	B	55,0	2,17	M	68,5	2,70	Q	65,0	2,56	H	61,0	2,40	1,70	3,74
	M VD114 BSP	Male	809500023								D	121,0	4,76				N	85 CH80 **	3,35 - CH3,15 **	P	80,0	3,15				2,48	5,46
1-1/4"	F VD114-112 BSP	Female	809500024	31,5	8	1 - 1/2"	70X3 SP*	G	201,0	7,91	F	123,2	4,85	B	55,0	2,17	M	68,5	2,70	Q	65,0	2,56	H	61,0	2,40	1,66	3,66
	M VD114-112 BSP	Male	809500025								D	127,0	5,00				N	85 CH80 **	3,35 - CH3,15 **	P	80,0	3,15				2,44	5,38

*SP = SPECIAL THREAD
**HEXAGON SLEEVE

VDSERIES

Stucchi®

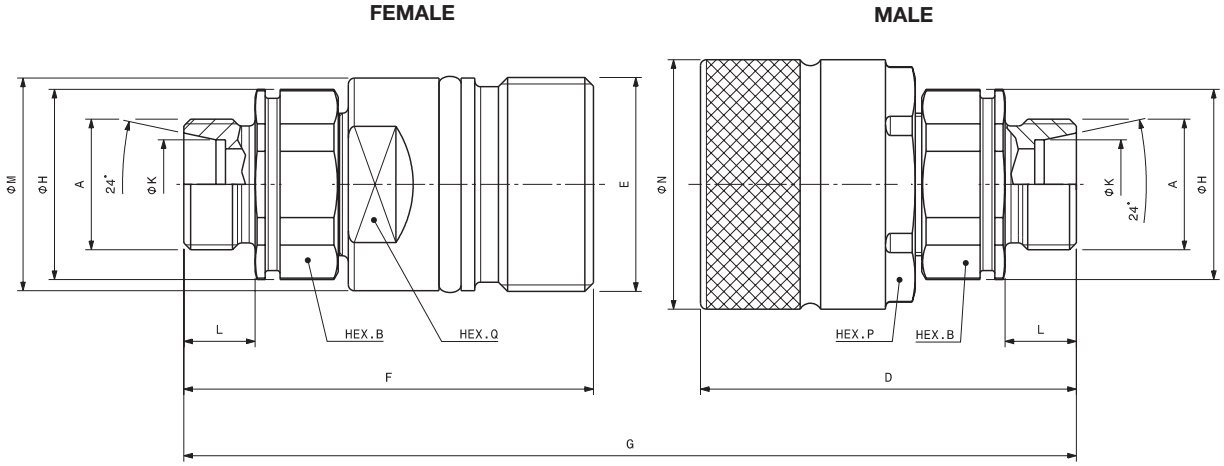

Port description: MALE THREAD METRIC L – 24° CONE (ISO 8434-1 & DIN 2353)

BODY SIZE	Descriptive Code	Item Code		ISO DN	BG	PORT (A)	E	Overall Length			Length			Length			Hex			Diameter			Diameter			Hex			Diameter			Weight	
									mm	in		mm	in		mm	in		mm	in		mm	in		mm	in		mm	in		mm	in		kg	lb
1/4"	F VD14 L8	Female	809508012	6,3	1	M14X1	M24X2	G	90,5	3,56	F	59,7	2,36	L	10,0	0,39	B	19,0	0,75	K	8,0	0,31	M	23,8	0,94	Q	22,0	0,87	H	21,0	0,83	0,10	0,046
	M VD14 L8	Male	809508013								D	56,5	2,23										N	30,0	1,18	P	27,0	1,06				0,10	0,047
3/8"	F VD38 L8	Female	809508014	10	2	M14X1.5	M28X2	G	93,0	3,66	F	61,3	2,41	L	10,0	0,39	B	22,0	0,87	K	8,0	0,31	M	27,8	1,09	Q	24,0	0,94	H	24,0	0,94	0,16	0,070
	M VD38 L8	Male	809508015								D	58,5	2,31										N	34,0	1,34	P	30,0	1,18				0,14	0,063
3/8"	F VD38 L10	Female	809508016	10	2	M16X1.5	M28X2	G	95,0	3,74	F	62,3	2,45	L	11,0	0,43	B	22,0	0,87	K	10,0	0,39	M	27,8	1,09	Q	24,0	0,94	H	24,0	0,94	0,17	0,07
	M VD38 L10	Male	809508017								D	59,5	2,35										N	34,0	1,34	P	30,0	1,18				0,14	0,06
3/8"	F VD38 L12	Female	809508018	10	2	M18X1.5	M28X2	G	95,0	3,74	F	62,3	2,45	L	11,0	0,43	B	22,0	0,87	K	12,0	0,47	M	27,8	1,09	Q	24,0	0,94	H	24,0	0,94	0,14	0,06
	M VD38 L12	Male	809508019								D	59,5	2,35										N	34,0	1,34	P	30,0	1,18				0,14	0,06
1/2"	F VD12 L8	Female	809508002	12,5	3	M14X1.5	M36X2	G	100,6	3,96	F	67,0	2,64	L	10,0	0,39	B	30,0	1,18	K	8,0	0,31	M	35,8	1,41	Q	30,0	1,18	H	32,0	1,26	0,26	0,12
	M VD12 L8	Male	809508003								D	61,3	2,41										N	42,0	1,65	P	36,0	1,42				0,21	0,10
1/2"	F VD12 L10	Female	809508006	12,5	3	M16X1.5	M36X2	G	102,6	4,04	F	68,0	2,68	L	11,0	0,43	B	30,0	1,18	K	10,0	0,39	M	35,8	1,41	Q	30,0	1,18	H	32,0	1,26	0,30	0,13
	M VD12 L10	Male	809508007								D	62,3	2,45										N	42,0	1,65	P	36,0	1,42				0,21	0,10
1/2"	F VD12 L12	Female	809508000	12,5	3	M18X1.5	M36X2	G	102,6	4,04	F	68,0	2,68	L	11,0	0,43	B	30,0	1,18	K	12,0	0,47	M	35,8	1,41	Q	30,0	1,18	H	32,0	1,26	0,26	0,12
	M VD12 L12	Male	809508001								D	62,3	2,45										N	42,0	1,65	P	36,0	1,42				0,21	0,10
1/2"	F VD12 L15	Female	809508004	12,5	3	M22X1.5	M36X2	G	104,6	4,12	F	69,0	2,72	L	12,0	0,47	B	30,0	1,18	K	15,0	0,59	M	35,8	1,41	Q	30,0	1,18	H	32,0	1,26	0,26	0,12
	M VD12 L15	Male	809508005								D	63,3	2,49										N	42,0	1,65	P	36,0	1,42				0,21	0,10
1/2"	F VD12 L18	Female	809508008	12,5	3	M26X1.5	M36X2	G	104,6	4,12	F	69,0	2,72	L	12,0	0,47	B	30,0	1,18	K	18,0	0,71	M	35,8	1,41	Q	30,0	1,18	H	32,0	1,26	0,27	0,12
	M VD12 L18	Male	809508009								D	63,3	2,49										N	42,0	1,65	P	36,0	1,42				0,22	0,10
3/4"	F VD34 L12	Female	809508022	20	4	M18X1.5	M42X2	G	116,5	4,59	F	78,9	3,11	L	11,0	0,43	B	36,0	1,42	K	12,0	0,47	M	41,8	1,65	Q	36,0	1,42	H	40,0	1,57	0,40	0,18
	M VD34 L12	Male	809508023								D	69,4	2,74										N	49,5	1,95	P	46,0	1,61				0,34	0,15
3/4"	F VD34 L15	Female	809508024	20	4	M22X1.5	M42X2	G	118,5	4,67	F	79,9	3,15	L	12,0	0,47	B	36,0	1,42	K	15,2	0,60	M	41,8	1,65	Q	36,0	1,42	H	40,0	1,57	0,40	0,18
	M VD34 L15	Male	809508025								D	70,4	2,78										N	49,5	1,95	P	46,0	1,61				0,34	0,15
3/4"	F VD34 L18	Female	809508026	20	4	M26X1.5	M42X2	G	120,5	4,74	F	80,9	3,19	L	12,0	0,47	B	36,0	1,42	K	18,2	0,72	M	41,8	1,65	Q	36,0	1,42	H	40,0	1,57	0,41	0,18
	M VD34 L18	Male	809508027								D	71,4	2,81										N	49,4	1,89	P	46,0	1,61				0,34	0,15
3/4"	F VD34 L22	Female	809508028	20	4	M30X2	M42X2	G	122,5	4,82	F	81,9	3,23	L	14,0	0,55	B	36,0	1,42	K	22,0	0,87	M	41,8	1,65	Q	36,0	1,42	H	40,0	1,57	0,41	0,18
	M VD34 L22	Male	809508029								D	72,4	2,85										N	49,5	1,95	P	46,0	1,61				0,34	0,15
1"	F VD100 L18	Female	809508030	25	6	M26X1,5	Rd 48X3 SP*	G	138,7	5,46	F	95,0	3,74	L	12,0	0,47	B	41,0	1,61	K	18,0	0,71	M	47,8	1,88	Q	41,0	1,61	H	45,0	1,77	0,70	0,32
	M VD100 L18	Male	809508031								D	78,5	3,09										N	60 CH 55**	2.36 CH2.16**	P	55,0	2,16				0,59	0,27
1"	F VD100 L22	Female	809508032	25	6	M30X2	Rd 48X3 SP*	G	142,7	5,62	F	97,0	3,82	L	14,0	0,55	B	41,0	1,61	K	22,2	0,87	M	47,8	1,88	Q	41,0	1,61	H	45,0	1,77	0,70	0,32
	M VD100 L22	Male	809508033								D	80,5	3,17										N	60 CH 55**	2.36 CH2.16**	P	55,0	2,16				0,60	0,27
1"	F VD100 L28	Female	809508034	25	6	M36X2	Rd 48X3 SP*	G	142,7	5,62	F	97,0	3,82	L	14,0	0,55	B	41,0	1,61	K	28,2	1,11	M	47,8	1,88	Q	41,0	1,61	H	45,0	1,77	0,70	0,32
	M VD100 L28	Male	809508035								D	80,5	3.17										N	60 CH 55**	2.36 CH2.16**	P	55,0	2,16				0.60	0,27
1"	F VD100 L35	Female	809508036	25	6	M45X2	Rd 48X3 SP*	G	146,7	5,78	F	99,0	3,90	L	16,0	0,63	B	46,0	1,81	K	35,3	1,39	M	47,8	1,88	Q	41,0	1,61	H	50,0	1,97	0,78	0,35
	M VD100 L35	Male	809508037								D	82,5	3,25										N	60 CH 55**	2.36 CH2.16**	P	55,0	2,16				0,68	0,31

* SP = SPECIAL THREAD

Stucchi®

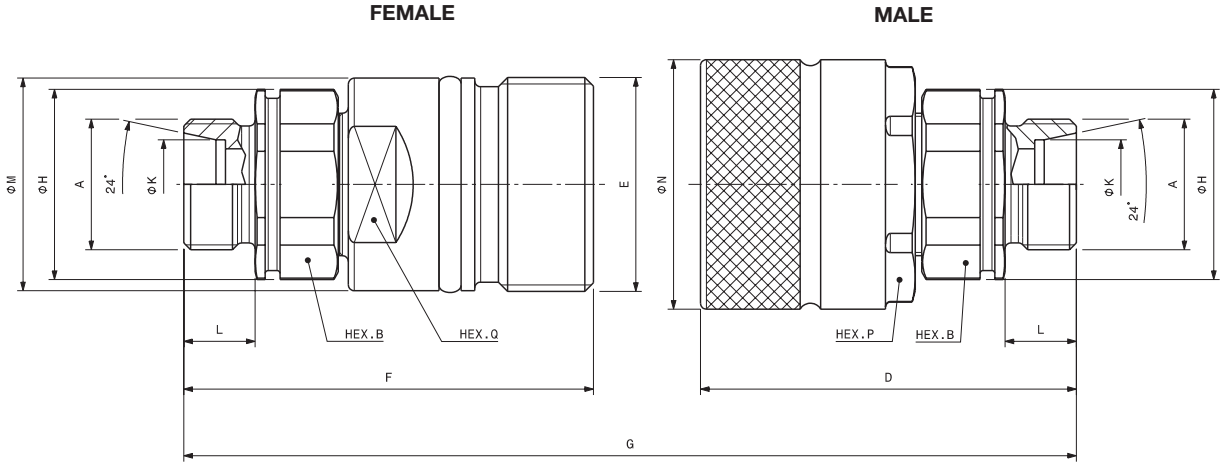

Port description: MALE THREAD METRIC S – 24° CONE (ISO 8434-1 & DIN 2353)

BODY SIZE	Descriptive Code	Item Code		ISO DN	BG	PORT (A)	E	Overall Length mm	Overall Length in	Length mm	Length in	Length mm	Length in	Hex mm	Hex in	Diameter mm	Diameter in	Diameter mm	Diameter in	Hex mm	Hex in	Diameter mm	Diameter in	Weight kg	Weight lb
3/8"	F VD38 S8	Female	809509012	10	2	M16X1.5	M28X2	G	97,0	3,82	F	63,3	2,49	L	12,0	0,47	B	22,0	0,87	K	8,0	0,31	M	27,8	1,09	Q	24,0	0,94	H	24,0	0,94	0,17	0,37
	M VD38 S8	Male	809509013								D	60,5	2,38										N	34,0	1,34	P	30,0	1,18				0,14	0,31
3/8"	F VD38 S10	Female	809509008	10	3	M18X1.5	M28X2	G	97,0	3,82	F	63,3	2,49	L	12,0	0,47	B	22,0	0,87	K	10,0	0,39	M	27,8	1,09	Q	24,0	0,94	H	24,0	0,94	0,14	0,31
	M VD38 S10	Male	809509009								D	60,5	2,38										N	34,0	1,34	P	30,0	1,18				0,14	0,31
1/2"	F VD12 S10	Female	809509000	12,5	3	M18X1.5	M36X2	G	104,6	4,12	F	69,0	2,72	L	12,0	0,47	B	30,0	1,18	K	10,0	0,39	M	35,8	1,41	Q	30,0	1,18	H	32,0	1,26	0,26	0,58
	M VD12 S10	Male	809509001								D	63,3	2,49										N	42,0	1,65	P	36,0	1,42				0,22	0,47
1/2"	F VD12 S12	Female	809509002	12,5	3	M20X1.5	M36X2	G	103,6	4,08	F	69,0	2,72	L	12,0	0,47	B	30,0	1,18	K	12,0	0,47	M	35,8	1,41	Q	30,0	1,18	H	32,0	1,26	0,26	0,58
	M VD12 S12	Male	809509003								D	63,3	2,49										N	42,0	1,65	P	36,0	1,42				0,21	0,47
1/2"	F VD12 S14	Female	809509004	12,5	3	M22X1.5	M36X2	G	-	-	F	71,0	2,80	L	14,0	0,55	B	30,0	1,18	K	14,0	0,55	M	35,8	1,41	Q	30,0	1,18	H	32,0	1,26	0,26	0,58
	M VD12 S14	Male	809509005								D	65,3	2,57										N	42,0	1,65	P	36,0	1,42				0,22	0,47
1/2"	F VD12 S16	Female	809509006	12,5	3	M24X1.5	M36X2	G	108,6	4,28	F	71,0	2,80	L	14,0	0,55	B	30,0	1,18	K	16,0	0,63	M	35,8	1,41	Q	30,0	1,18	H	32,0	1,26	0,30	0,66
	M VD12 S16	Male	809509007								D	65,3	2,57										N	42,0	1,65	P	36,0	1,42				0,26	0,57
3/4"	F VD34 S16	Female	809509014	20	4	M24X1,5	M42X2	G	122,5	4,82	F	81,9	3,22	L	14,0	0,55	B	36,0	1,42	K	16,0	0,63	M	41,8	1,65	Q	36,0	1,42	H	40,0	1,57	0,41	0,89
	M VD34 S16	Male	809509015								D	72,4	2,85										N	48,0	1,89	P	46,0	1,81				0,34	0,75
3/4"	F VD34 S20	Female	809509016	20	4	M30X2	M42X2	G	126,5	4,98	F	83,9	3,30	L	16,0	0,63	B	36,0	1,42	K	20,0	0,79	M	41,8	1,65	Q	36,0	1,42	H	40,0	1,57	0,41	0,90
	M VD34 S20	Male	809509017								D	74,4	2,92										N	48,0	1,89	P	46,0	1,81				0,34	0,75
1"	F VD100 S20	Female	809509018	25	6	M30X2	48X3 SP *	G	-	-	F	99,0	3,90	L	16,0	0,63	B	41,0	1,61	K	20,2	0,80	M	47,8	1,88	Q	41,0	1,61	H	45,0	1,77	0,72	1,58
	M VD100 S20	Male	809509019								D	82,5	3,25										N	60 CH 55**	2.36 CH2.16**	P	55,0	2,16				0,61	1,34
1"	F VD100 S25	Female	809509020	25	6	M36X2	48X3 SP *	G	150,7	5,93	F	101,0	3,98	L	18,0	0,71	B	41,0	1,61	K	25,2	0,99	M	47,8	1,88	Q	41,0	1,61	H	45,0	1,77	0,74	1,62
	M VD100 S25	Male	809509021								D	84,5	3,33										N	60 CH 55**	2.36 CH2.16**	P	55,0	2,16				0,63	1,39
1"	F VD100 S30	Female	809509022	25	6	M42X2	48X3 SP *	G	154,7	6,09	F	103,0	4,06	L	20,0	0,79	B	46,0	1,81	K	30,2	1,19	M	47,8	1,88	Q	41,0	1,61	H	50,0	1,97	0,81	1,79
	M VD100 S30	Male	809509023								D	86,5	3,41										N	60 CH 55**	2.36 CH2.16**	P	55,0	2,16				0,71	1,57
1-1/4"	F VD114 S30	Female	809509026	31,5	8	M42X2	70X3 SP *	G	183,0	7,20	F	114,2	4,50	L	20,0	0,79	B	55,0	2,17	K	30,2	1,19	M	68,5	2,70	Q	65,0	2,56	H	61,0	2,40	1,59	3,50
	M VD114 S30	Male	809509027								D	118,0	4,65										N	85 CH80**	3,35 - CH3,15**	P	80,0	3,15				2,36	5,19
1-1/4"	F VD114 S38	Female	809509028	31,5	8	M52X2	70X3 SP *	G	187,0	7,36	F	116,2	4,57	L	22,0	0,87	B	55,0	2,17	K	38,3	1,51	M	68,5	2,70	Q	65,0	2,56	H	61,0	2,40	1,63	3,59
	M VD114 S38	Male	809509029								D	120,0	4,72										N	85 CH80**	3,35 - CH3,15**	P	80,0	3,15				2,41	5,31

*SP = SPECIAL THREAD
**HEXAGON SLEEVE

VDSERIES

Stucchi®

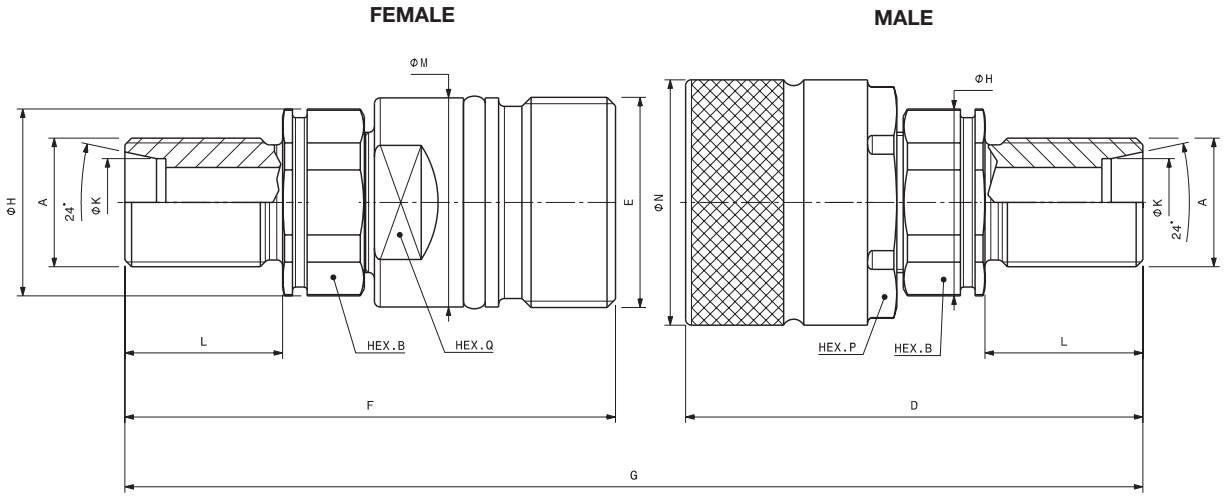

Port description: MALE THREAD METRIC L SCHOTT – 24° CONE BULKHEAD (ISO 8434-1 & DIN 2353)

BODY SIZE	Descriptive Code	Item Code	ISO DN	BG	PORT(A)	E	Overall Length mm	Overall Length in	Length mm	Length in	Length mm	Length in	Hex mm	Hex in	Diameter mm	Diameter in	Diameter mm	Diameter in	Hex mm	Hex in	Diameter mm	Diameter in	Weight kg	Weight lb
1/4"	F VD14 L8 SCHOTT	Female 809510012 ◆	6,3	1	M14X1.5	M24X2	G	-	-	F 74,7	2,94	L 25,0	0,98	B 19,0	0,75	K 8,0	0,31	M 23,8	0,94	Q 22,0	0,87	H 21,0	0,83	0,10	0,23
	M VD14 L8 SCHOTT	Male 809510013 ◆								D -	-							N -	-	P -	-			-	-
3/8"	F VD38 L8 SCHOTT	Female 809510014	10	2	M14X1.5	M28X2	G	-	-	F 76,3	3,00	L 25,0	0,98	B 22,0	0,87	K 8,0	0,31	M 27,8	1,09	Q 24,0	0,94	H 24,0	0,94	0,14	0,31
	M VD38 L8 SCHOTT	Male 809510015								D 73,5	2,89							N 34,0	1,34	P 30,0	1,18			0,14	0,31
3/8"	F VD38 L10 SCHOTT	Female 809510016	10	2	M16X1.5	M28X2	G	125,0	4,92	F 77,3	3,04	L 26,0	1,02	B 22,0	0,87	K 10,0	0,39	M 27,8	1,09	Q 24,0	0,94	H 24,0	0,94	0,17	0,37
	M VD38 L10 SCHOTT	Male 809510017								D 74,5	2,93							N 34,0	1,34	P 30,0	1,18			0,14	0,31
1/2"	F VD12 L10 SCHOTT	Female 809510006	12,5	3	M16X1.5	M36X2	G	132,6	5,22	F 83,0	3,27	L 26,0	1,02	B 30,0	1,18	K 10,0	0,39	M 35,8	1,41	Q 30,0	1,18	H 32,0	1,26	0,32	0,69
	M VD12 L10 SCHOTT	Male 809510007								D 77,3	3,04							N 42,0	1,65	P 36,0	1,42			0,22	0,47
1/2"	F VD12 L12 SCHOTT	Female 809510000	12,5	3	M18X1.5	M36X2	G	140,6	5,54	F 87,0	3,43	L 30,0	1,18	B 30,0	1,18	K 12,0	0,47	M 35,8	1,41	Q 30,0	1,18	H 32,0	1,26	0,27	0,58
	M VD12 L12 SCHOTT	Male 809510001								D 81,3	3,20							N 42,0	1,65	P 36,0	1,42			0,22	0,48
1/2"	F VD12 L15 SCHOTT	Female 809510004	12,5	3	M22X1.5	M36X2	G	134,6	5,30	F 84,0	3,31	L 27,0	1,06	B 30,0	1,18	K 15,0	0,59	M 35,8	1,41	Q 30,0	1,18	H 32,0	1,26	0,27	0,59
	M VD12 L15 SCHOTT	Male 809510005								D 78,3	3,08							N 42,0	1,65	P 36,0	1,42			0,22	0,48
1/2"	F VD12 L18 SCHOTT	Female 809510008	12,5	3	M26X1.5	M36X2	G	134,6	5,30	F 84,0	3,31	L 27,0	1,06	B 30,0	1,18	K 18,0	0,71	M 35,8	1,41	Q 30,0	1,18	H 32,0	1,26	0,27	0,60
	M VD12 L18 SCHOTT	Male 809510009								D 78,3	3,08							N 42,0	1,65	P 36,0	1,42			0,22	0,47
3/4"	F VD34 L15 SCHOTT	Female 809510024	20	4	M22X1.5	M42X2	G	148,5	5,85	F 94,9	3,74	L 27,0	1,06	B 36,0	1,42	K 15,2	0,60	M 41,8	1,65	Q 36,0	1,42	H 40,0	1,57	0,41	0,90
	M VD34 L15 SCHOTT	Male 809510025								D 85,4	3,36							N 49,5	1,95	P 46,0	1,81			0,34	0,75
3/4"	F VD34 L18 SCHOTT	Female 809510026	20	4	M26X1.5	M42X2	G	150,5	5,93	F 95,9	3,77	L 27,0	1,06	B 36,0	1,42	K 18,0	0,71	M 41,8	1,65	Q 36,0	1,42	H 40,0	1,57	0,41	0,91
	M VD34 L18 SCHOTT	Male 809510027								D 86,4	3,40							N 49,5	1,95	P 46,0	1,81			0,35	0,76
3/4"	F VD34 L22 SCHOTT 36	Female 809510028	20	4	M30X2	M42X2	G	-	-	F 103,9	4,09	L 36,0	1,42	B 36,0	1,42	K 22,0	0,87	M 41,8	1,65	Q 36,0	1,42	H 40,0	1,57	0,42	0,91
	M VD34 L22 SCHOTT 36	Male 809510029 ◆								D 94,4	3,72							N 49,5	1,95	P 46,0	1,81			0,35	0,77
1"	F VD100 L18 SCHOTT 32	Female 809510030	25	6	M26X1,5	48X3 SP*	G	178,7	7,04	F 115,0	4,53	L 32,0	1,26	B 41,0	1,61	K 18,0	0,71	M 47,8	1,88	Q 41,0	1,61	H 45,0	1,77	0,74	1,63
	M VD100 L18 SCHOTT 32	Male 809510031								D 98,5	3,88							N 60 CH 55**	2.36 CH2.16**	P 55,0	2,16			0,64	1,42
1"	F VD100 L22 SCHOTT 32	Female 809510032	25	6	M30X2	48X3 SP*	G	182,7	7,19	F 117,0	4,61	L 34,0	1,34	B 41,0	1,61	K 22,2	0,87	M 47,8	1,88	Q 41,0	1,61	H 45,0	1,77	0,76	1,66
	M VD100 L22 SCHOTT 32	Male 809510033								D 100,5	3,96							N 60 CH 55**	2.36 CH2.16**	P 55,0	2,16			0,65	1,43
1"	F VD100 L28 SCHOTT	Female 809510034	25	6	M36X2	48X3 SP*	G	182,7	7,19	F 117,0	4,61	L 34,0	1,34	B 41,0	1,61	K 28,2	1,11	M 47,8	1,88	Q 41,0	1,61	H 45,0	1,77	0,78	1,71
	M VD100 L28 SCHOTT	Male 809510035								D 100,5	3,96							N 60 CH 55**	2.36 CH2.16**	P 55,0	2,16			0,67	1,48

◆ Available upon request.

* SP = SPECIAL THREAD

Locknuts available upon request.

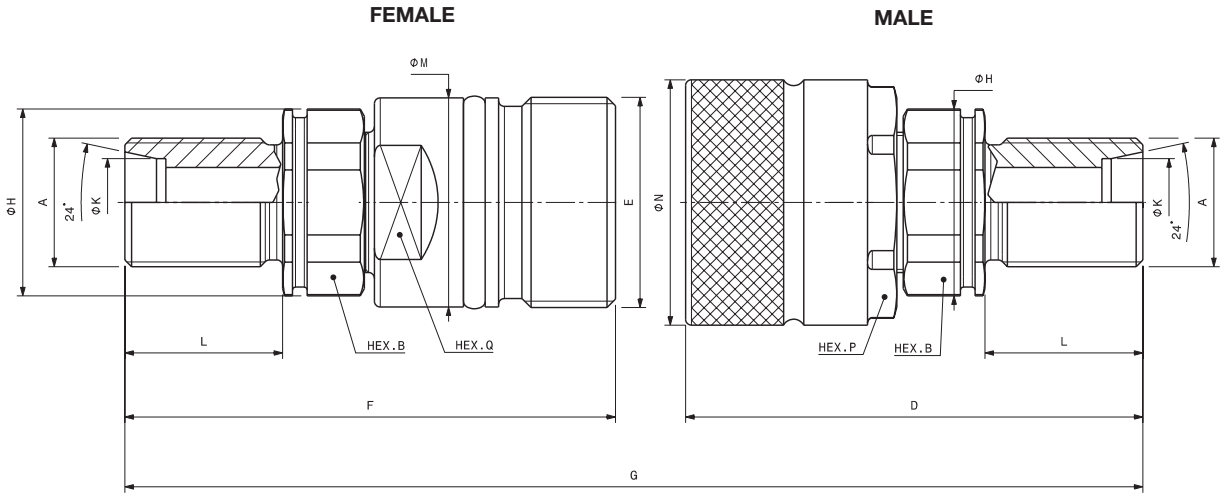

Port description: MALE THREAD METRIC S SCHOTT – 24° CONE BULKHEAD (ISO 8434-1 & DIN 8353)

BODY SIZE	Descriptive Code	Item Code	ISO DN	BG	PORT (A)	E	Overall Length mm	Overall Length inch	Length	Length mm	Length inch	Diameter	Diameter mm	Diameter inch	Wrench Flat	Wrench Flat mm	Wrench Flat inch	Diameter	Diameter mm	Diameter inch	Diameter	Diameter mm	Diameter inch	Hex	Hex mm	Hex inch	Diameter	Diameter mm	Diameter inch	Weight Kg	Weight Lbs
3/8"	F VD38 S12 SCHOTT	Female 809511010	10	2	M20X1.5	M28X2	G	-	-	F	78,3	3,08	L	27	1,06	B	22,0	0,87	K	12,0	0,47	M	-	-	Q	-	-	H	24,0	0,94	0,15	0,32
	M VD38 S12 SCHOTT	Male 809511011								D	75,5	2,97										N	34,0	1,34	P	30,0	1,18				0,32	0,71
1/2"	F VD12 S10 SCHOTT	Female 809511000	12,5	3	M18X1.5	M36X2	G	134,6	5,30	F	84,0	3,31	L	27	1,06	B	30,0	1,18	K	10,0	0,39	M	35,8	1,41	Q	30,0	1,18	H	32,0	1,26	0,27	0,59
	M VD12 S10 SCHOTT	Male 809511001								D	78,3	3,08										N	42,0	1,65	P	36,0	1,42				0,59	1,30
1/2"	F VD12 S12 SCHOTT	Female 809511002	12,5	3	M20X1.5	M36X2	G	134,6	5,30	F	84,0	3,31	L	27	1,06	B	30,0	1,18	K	12,0	0,47	M	35,8	1,41	Q	30,0	1,18	H	32,0	1,26	0,27	0,59
	M VD12 S12 SCHOTT	Male 809511003								D	78,3	3,08										N	42,0	1,65	P	36,0	1,42				0,59	1,30
1/2"	F VD12 S16 SCHOTT	Female 809511006	12,5	3	M24X1.5	M36X2	G	138,6	5,46	F	86,0	3,39	L	29	1,14	B	30,0	1,18	K	16,0	0,63	M	35,8	1,41	Q	30,0	1,18	H	32,0	1,26	0,27	0,60
	M VD12 S16 SCHOTT	Male 809511007								D	80,3	3,16										N	42,0	1,65	P	36,0	1,42				0,60	1,31
3/4"	F VD34 S16 SCHOTT	Female 809511014 ♦	20	4	M24X1.5	M42X2	G	-	-	F	96,9	3,81	L	29	1,14	B	36,0	1,42	K	16,2	0,64	M	41,8	1,65	Q	36,0	1,42	H	40,0	1,57	0,41	0,90
	M VD34 S16 SCHOTT	Male 809511015 ♦								D	-	-										N	-	-	P	-	-				0,90	1,99
3/4"	F VD34 S20 SCHOTT	Female 809511016	20	4	M30X2	M42X2	G	166,5	6,56	F	103,9	4,09	L	36	1,42	B	36,0	1,42	K	20,0	0,79	M	41,8	1,65	Q	36,0	1,42	H	40,0	1,57	0,42	0,92
	M VD34 S20 SCHOTT	Male 809511017								D	94,4	3,72										N	49,5	1,90	P	46,0	1,81				0,92	2,03
1"	F VD100 S20 SCHOTT	Female 809511018	25	6	M30X2	48X3 SP*	G	190,7	7,51	F	121,0	4,76	L	38	1,50	B	41,0	1,61	K	20,2	0,80	M	47,8	1,88	Q	41,0	1,61	H	45,0	1,77	0,69	1,51
	M VD100 S20 SCHOTT	Male 809511019								D	104,5	4,11										N	60 CH 55**	2.36 CH2.16**	P	55,0	2,16				1,51	3,33
1"	F VD100 S25 SCHOTT	Female 809511020	25	6	M36X2	48X3 SP*	G	190,7	7,51	F	121,0	4,76	L	38	1,50	B	41,0	1,61	K	25,2	0,99	M	47,8	1,88	Q	41,0	1,61	H	45,0	1,77	0,83	1,83
	M VD100 S25 SCHOTT	Male 809511021								D	104,5	4,11										N	60 CH 55**	2.36 CH2.16**	P	55,0	2,16				1,83	4,03
1"	F VD100 S30 SCHOTT	Female 809511022	25	6	M42X2	48X3 SP*	G	194,7	7,67	F	123,0	4,84	L	40	1,57	B	46,0	1,81	K	30,2	1,19	M	47,8	1,88	Q	41,0	1,61	H	50,0	1,97	0,94	2,06
	M VD100 S30 SCHOTT	Male 809511023								D	106,5	4,19										N	60 CH 55**	2.36 CH2.16**	P	55,0	2,16				2,06	4,54
1"	F VD100 S38 SCHOTT	Female 809511024 ♦	25	6	M52X2	48X3 SP*	G	-	-	F	123,0	4,84	L	40	1,57	B	55,0	2,17	K	38,3	1,51	M	47,8	1,88	Q	41,0	1,61	H	60,0	2,36	1,16	2,55
	M VD100 S38 SCHOTT	Male 809511025 ♦								D	-	-										N	-	-	P	-	-				2,55	5,61

*SP = SPECIAL THREAD

♦Available upon request.

Locknuts available upon request.

SPARE KIT SEAL FOR FEMALE

Repair kit / OR+BK		
Body Size	Description	Part Number
1/4”	F VD14	815700900
3/8”	F VD38	815701151
1/2”	F VD12	815700904
3/4”	F VD34	815700906
1”	F VD100	815700908
1-1/4”	F VD114	815700910

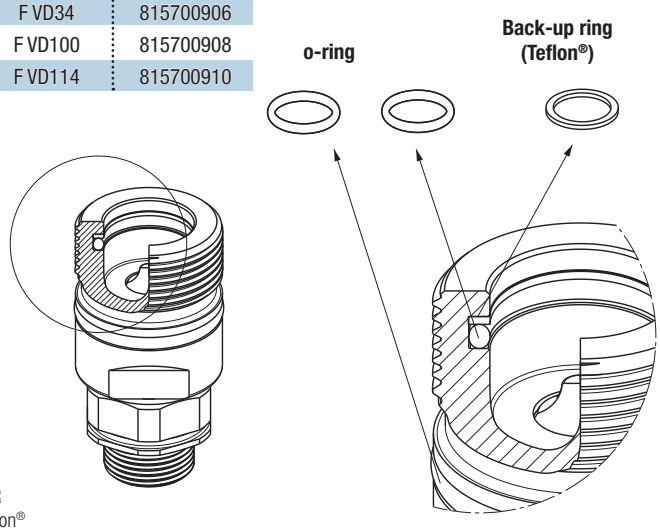

O-Ring in NBR
BackUp in Teflon®

PROTECTIVE CAPS FOR VD SERIES

Protective caps are always recommended to protect the couplings from damage, dirt inclusion, and will increase the product life. This is particularly important in mobile applications where exposure to weather and aggregate materials are common. The protective caps for VD couplings are manufactured in plastic with connection lanyard (standard color red).

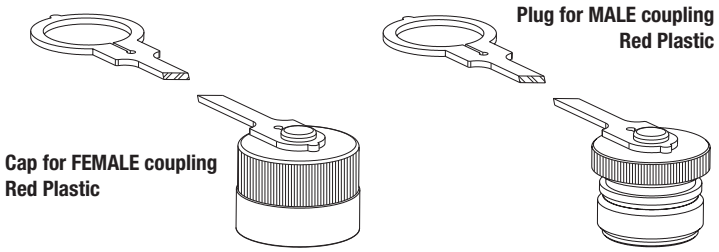

Protective Cap				
Body Size/Description		Part Number		Material/Color
		Cap for Female	Plug for Male	
1/4”	VD14	814900000	814900001	Plastic/Red
3/8”	VD38	814900002	814900003	Plastic/Red
1/2”	VD12	814900004	814900005	Plastic/Red
3/4”	VD34	814900006	814900007	Plastic/Red
1”	VD100	814900016	814900017	Plastic/Red
1-1/4”	VD114	814900018	814900019	Plastic/Red

STUCCHI Quick Couplings Catalog - December 2024 - All right reserved.
Texts, data and illustrations mentioned in this catalogue may be changed by Stucchi at any time, without notice; always refer to the version uploaded on the English version of stucchigroup.com/en website for the latest release. In case of doubt, please contact Stucchi technical service.

BOP

TECHNICAL FEATURES AND OPTIONS

Interchange
Similar Couplings (Oil & Gas)

Sealing description
Nitrile NBR

Connection system
Screw

Available sizes
From 3/4" to 2"

Material /treatment
Carbon steel /Cr3

Available threads
BSP - NPT - SAE

Operating pressure
Up to 345 bar

Locking mechanism
Screw to connect

Flow rate
Up to 1100 l/min

Temperature (°C)
-20°C / +100°C

Valving style
Poppet

Connection under pressure
Connection: one side
Disconnection: not allowed

BENEFITS

- Connection under residual pressure is allowed in one side.
- Inspection hole to control if the coupling is completely connected.
- All dimensions of Stucchi VOF series are certified with Lloyd Type Approval in accordance with API 16D at specific rating pressure of 345 bar/5000 psi for all sizes except size 2" that is 333 bar/4830 psi.
- Wrench flat on the bodies to facilitate the fitting assembly.
- The poppet valve with elastomer seal provides maximum sealing of the couplings when disconnected.
- Retainer in high resistance carbon steel.
- Shape of internal parts is designed to reduce turbulence and pressure drop.
- High resistance to pressure impulses (500.000 connected).
- Compact design.
- Simple to use.

HOW TO USE

- Before to connect, clean the mating surface of the couplings to avoid dirt inclusion in the circuit.
- To connect insert the nipple in the coupler, screw the sleeve until positive stop (surface contact of two moving parts), do not push together the couplings, screw only.
- The use of tools for the second part of the connection can be necessary if there is high residual pressure in the circuit.
- Check inspection holes to ensure that the coupling is fully connected (no free space allowed).
- To disconnect unscrew totally the sleeve from the nipple.

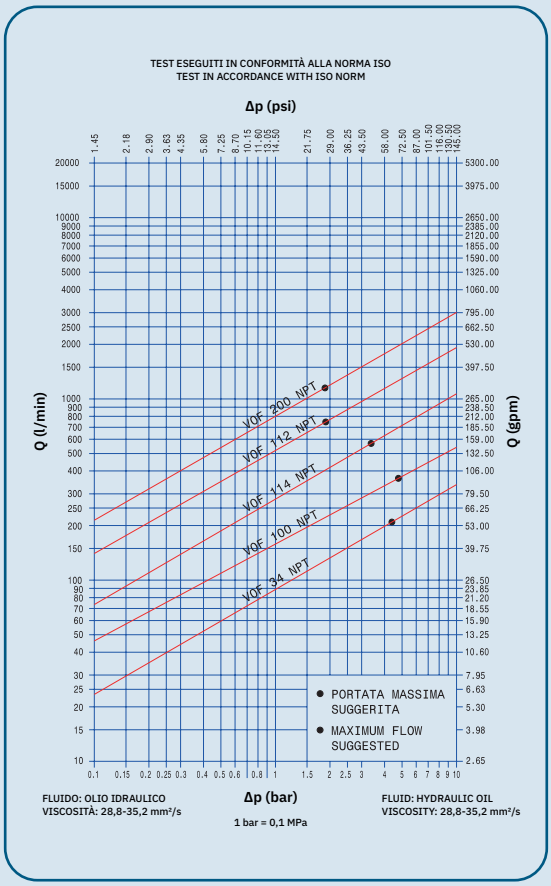

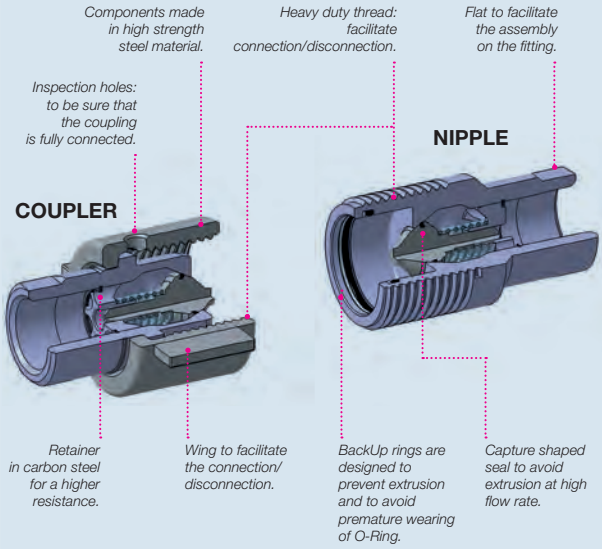

MAIN APPLICATIONS

Stucchi®

PERFORMANCES

Size		Series/Size	Max. flow suggested		Manual connect torque*		Manual disconnect torque*		Spillage**
in	mm		l/min	gpm	Nm	lbf ft	Nm	lbf ft	ml
3/4”	20	VOF34	212	56,18	1,2	0,89	0,6	0,44	11,5
1”	25	VOF100	378	100,17	1,6	1,18	1,1	0,81	21,2
1-1/4”	31,5	VOF114	576	152,64	2,8	2,07	1,9	1,40	42,3
1-1/2”	40	VOF112	758	200,87	4	2,95	3,6	2,66	82,6
2“	50	VOF200	1100	291,50	7,5	5,53	5,1	3,76	192,0

Size	Series/Size	Max. operating pressure						Burst pressure					
		Coupled		Nipple		Coupler		Coupled		Nipple		Coupler	
in		MPa	psi	MPa	psi	MPa	psi	MPa	psi	MPa	psi	MPa	psi
3/4”	VOF34	34,5	5000	34,5	5000	34,5	5000	137,9	20000	137,9	20000	100,0	14500
1”	VOF100	34,5	5000	34,5	5000	34,5	5000	137,9	20000	137,9	20000	100,0	14500
1-1/4”	VOF114	34,5	5000	34,5	5000	34,5	5000	137,9	20000	137,9	20000	100,0	14500
1-1/2”	VOF112	34,5	5000	34,5	5000	34,5	5000	137,9	20000	137,9	20000	82,8	12000
2 “	VOF200	34,5	5000	34,5	5000	34,5	5000	100,0	14500	90,0	13050	75,9	11000

* Connect torque and disconnect torque without residual pressure.
The torque will increase as internal residual pressure increases.

** Spillage is an indicative value of the fluid loss during disconnection (according to ISO norm test method).

BOP Only configurations mentioned in the dedicated BOP section of this catalog are BOP certified.
For complete technical information please contact Stucchi Technical Support.

Different possible configurations:
SAE thread available upon request.

Temperature range:
Standard seals NBR from -20 °C to +100 °C (from -4 °F to +212 °F).
Please read carefully Instructions and warnings for proper selection of the products.

Tests performed:
Qualification tests have been performed with hydraulic oil using couplings with NBR (Nitrile) seals.
The max. operating pressure have been verified fo 500.000 impulses according to ISO norm test method.
The couplings disconnected have been tested for 100.000 impulses.

WARNING

A defect, a wrong choice or an improper use of products, can cause injury to persons, animals and objects.
Never connect or disconnect with dynamic pressure (e.g. pump on).
Do not couple-uncouple with flow in the circuit.
Do not couple-uncouple when the temperature inside of the circuit is higher than 80 °C (176 °F).
Do not use the coupling disconnected with high impulse pressure.
Connect under pressure products are suitable to be connected under residual (static) pressure.
Connection with residual pressure (pressure trapped in the circuit) allowed with other side coupling to drain.
Check the maximum allowable working pressure of the port in use.
Make sure that the medium used is compatible with seal and material as indicated for each series.
In case of doubt please contact Stucchi Technical Support.
The interchangeability is mentioned under the assumption that the manufacturer of the considered products has not changed any dimension.
It is mandatory to carefully read and closely follow the instructions before selecting or using any Stucchi products.
Always refer to the version uploaded in the Instructions and warning section of stucchigroup.com website for the latest release.
For specific, product-related, instructions, please contact Stucchi technical service.

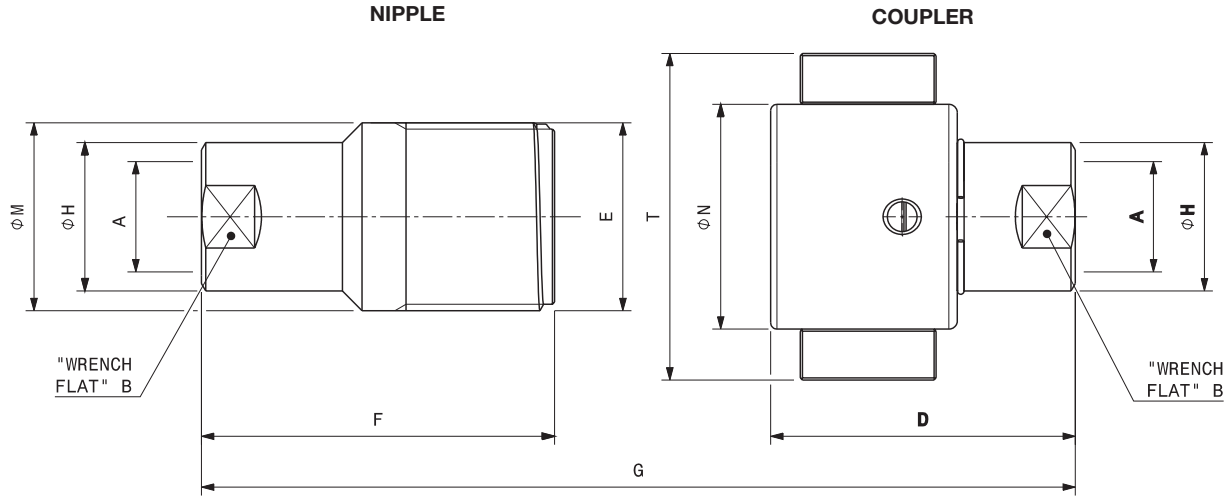

Port description: FEMALE THREAD NPT (ANSI B.1.20.1)

BODY SIZE	Descriptive Code	Item Code		PORT (A)	Thread		Overall Length			Length			Hex			Diameter		
								mm	in		mm	in		mm	in		mm	in
3/4"	VOF34 NPT	Nipple	811201002	3/4"	E	1 3/4-8 special	G	123,6	4,87	F	83,2	3,28	B	31,8	1,25	H	35,0	1,38
	VOF34 NPT	Coupler	811201003							D	71,8	2,83						
1"	VOF100 NPT	Nipple	811201000	1"	E	2 1/4-6 Stub ACME	G	152,9	6,02	F	105,8	4,17	B	41,3	1,63	H	45,0	1,77
	VOF100 NPT	Coupler	811201001							D	87,3	3,44						
1-1/4"	VOF114 NPT	Nipple	811201004	1-1/4"	E	2 5/8-6 Stub ACME	G	197,9	7,79	F	136,7	5,38	B	50,8	2,00	H	54,5	2,15
	VOF114 NPT	Coupler	811201005							D	112,4	4,43						
1-1/2"	VOF112 NPT	Nipple	811201006	1-1/2"	E	3 1/4-4 Stub ACME	G	220,3	8,67	F	151,2	5,95	B	57,2	2,25	H	63,5	2,50
	VOF112 NPT	Coupler	811201007							D	126,9	5,00						
2"	VOF200 NPT	Nipple	811201008	2"	E	4-4 Stub ACME	G	255,2	10,05	F	179,0	7,05	B	76,2	3,00	H	82,6	3,25
	VOF200 NPT	Coupler	811201009							D	154,2	6,07						

BODY SIZE	Descriptive Code	Item Code		Diameter			Max overall dimension			Weight	
					mm	in		mm	in	kg	lb
3/4"	VOF34 NPT	Nipple	811201002	M	44,3	1,74				0,48	1,05
	VOF34 NPT	Coupler	811201003	N	53,0	2,09	T	77,0	3,03	0,61	1,34
1"	VOF100 NPT	Nipple	811201000	M	57,2	2,25				1,19	2,62
	VOF100 NPT	Coupler	811201001	N	69,0	2,72	T	109,0	4,29	1,38	3,03
1-1/4"	VOF114 NPT	Nipple	811201004	M	66,7	2,62				1,95	4,30
	VOF114 NPT	Coupler	811201005	N	80,0	3,15	T	120,0	4,72	2,27	5,01
1-1/2"	VOF112 NPT	Nipple	811201006	M	82,6	3,25				3,22	7,11
	VOF112 NPT	Coupler	811201007	N	95,0	3,74	T	145,0	5,71	3,84	8,47
2"	VOF200 NPT	Nipple	811201008	M	101,6	4,00				6,04	13,32
	VOF200 NPT	Coupler	811201009	N	122,5	4,82	T	182,5	7,19	8,10	17,86

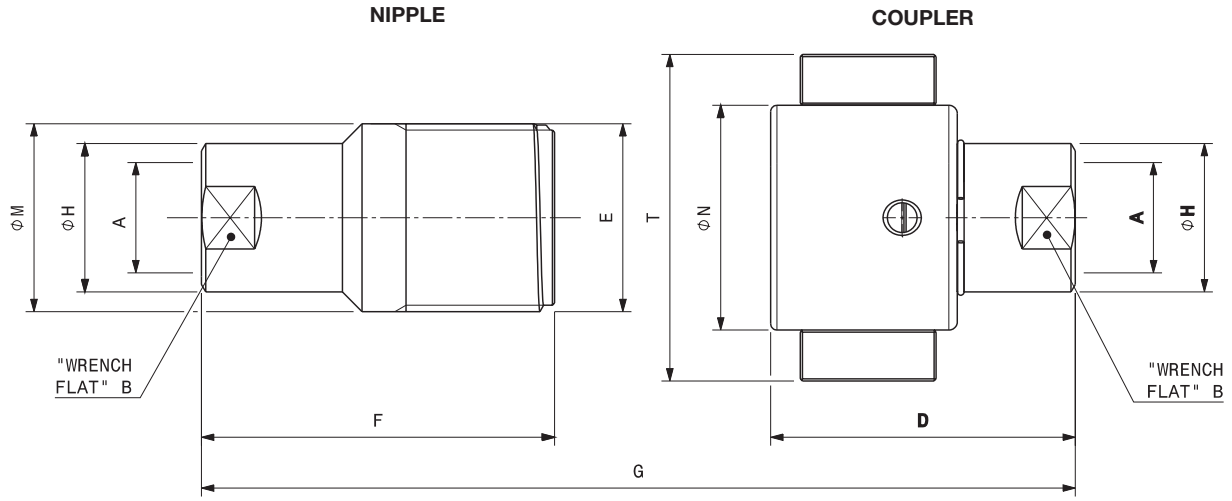

Port description: FEMALE THREAD BSPP (ISO 1179-1)

BODY SIZE	Descriptive Code	Item Code		PORT (A)		Thread	Overall Length			Length			Hex			Diameter		
								mm	in		mm	in		mm	in		mm	in
3/4"	VOF34 BSP	Nipple	811200002	3/4"	E	1 3/4-8 special	G	123,6	4,87	F	83,2	3,28	B	31,8	1,25	H	35,0	1,38
	VOF34 BSP	Coupler	811200003							D	71,8	2,83						
1"	VOF100 BSP	Nipple	811200000	1"	E	2 1/4-6 Stub ACME	G	152,9	6,02	F	105,8	4,17	B	41,3	1,63	H	45,0	1,77
	VOF100 BSP	Coupler	811200001							D	87,3	3,44						
1-1/4"	VOF114 BSP	Nipple	811200004	1-1/4"	E	2 5/8-6 Stub ACME	G	197,9	7,79	F	136,7	5,38	B	50,8	2,00	H	54,5	2,15
	VOF114 BSP	Coupler	811200005							D	112,4	4,43						
1-1/2"	VOF112 BSP	Nipple	811200006	1-1/2"	E	3 1/4-4 Stub ACME	G	220,3	8,67	F	151,2	5,95	B	57,2	2,25	H	63,5	2,50
	VOF112 BSP	Coupler	811200007							D	126,9	5,00						
2"	VOF200 BSP	Nipple	811200008	2"	E	4-4 Stub ACME	G	255,2	10,05	F	179,0	7,05	B	76,2	3,00	H	82,6	3,25
	VOF200 BSP	Coupler	811200009							D	154,2	6,07						

BODY SIZE	Descriptive Code	Item Code		Diameter			Max overall dimension			Weight	
					mm	in		mm	in	kg	lb
3/4"	VOF34 BSP	Nipple	811200002	M	44,30	1,74				0,50	1,10
	VOF34 BSP	Coupler	811200003	N	53,00	2,09	T	77,0	3,03	0,63	1,38
1"	VOF100 BSP	Nipple	811200000	M	57,15	2,25				1,17	2,58
	VOF100 BSP	Coupler	811200001	N	69,00	2,72	T	109,0	4,29	1,35	2,99
1-1/4"	VOF114 BSP	Nipple	811200004	M	66,67	2,62				1,92	4,23
	VOF114 BSP	Coupler	811200005	N	80,00	3,15	T	120,0	4,72	2,24	4,93
1-1/2"	VOF112 BSP	Nipple	811200006	M	82,55	3,25				3,16	6,97
	VOF112 BSP	Coupler	811200007	N	95,00	3,74	T	145,0	5,71	3,82	8,43
2"	VOF200 BSP	Nipple	811200008	M	101,60	4,00				6,03	13,29
	VOF200 BSP	Coupler	811200009	N	122,50	4,82	T	182,5	7,19	8,09	17,83

SPARE KIT SEAL FOR NIPPLE

Repair kit / OR+BK		
Body Size	Description	Part Number
3/4”	VOF34	815700956
1”	VOF100	815700958
1-1/4”	VOF114	815700960
1-1/2”	VOF112	815701122
2”	VOF200	815700964

O-Ring in Nitrile
BackUp in Teflon®

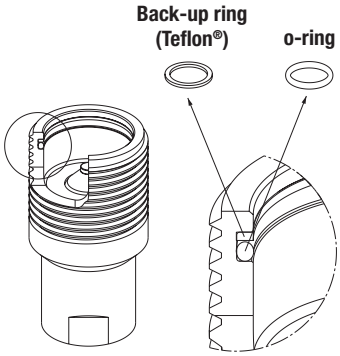

SPARE KIT INTERNAL PARTS

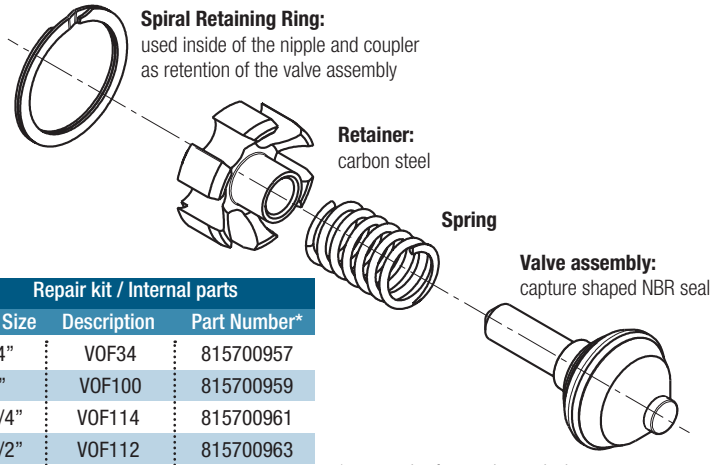

Repair kit / Internal parts		
Body Size	Description	Part Number*
3/4”	VOF34	815700957
1”	VOF100	815700959
1-1/4”	VOF114	815700961
1-1/2”	VOF112	815700963
2”	VOF200	**

*same codes for coupler or nipple
**contact Stucchi for the correct Part Number

PROTECTIVE CAPS FOR VOF SERIES

Protective caps are always recommended to protect the couplings from damage, dirt inclusion, and will increase the product life.
This is particularly important in Oil&Gas and mobile applications where exposure to weather and aggregate materials are common.
The protective caps for VOF couplings are manufactured in aluminum (natural color).

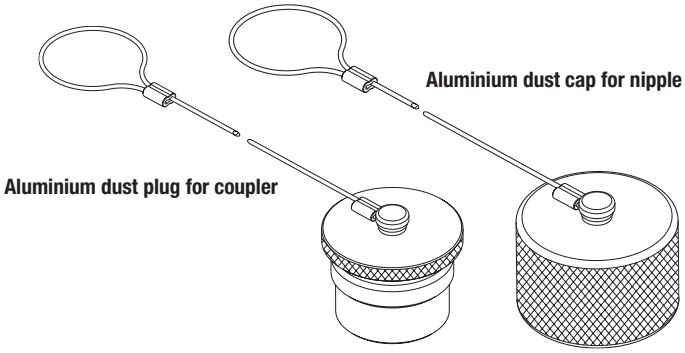

Protective Cap			
Body Size/Description	Part Number		Material/Color
	Plug for Coupler	Cap for Nipple	
3/4”	815405013	815405012	Aluminum/Natural
1”	815405011	815405010	Aluminum/Natural
1-1/4”	815405015	815405014	Aluminum/Natural
1-1/2”	815405017	815405016	Aluminum/Natural
2”	815405019	815405018	Aluminum/Natural

STUCCHI Quick Couplings Catalog - December 2024 - All right reserved.
Texts, data and illustrations mentioned in this catalogue may be changed by Stucchi at any time, without notice; always refer to the version uploaded on the English version of stucchigroup.com/en website for the latest release. In case of doubt, please contact Stucchi technical service.

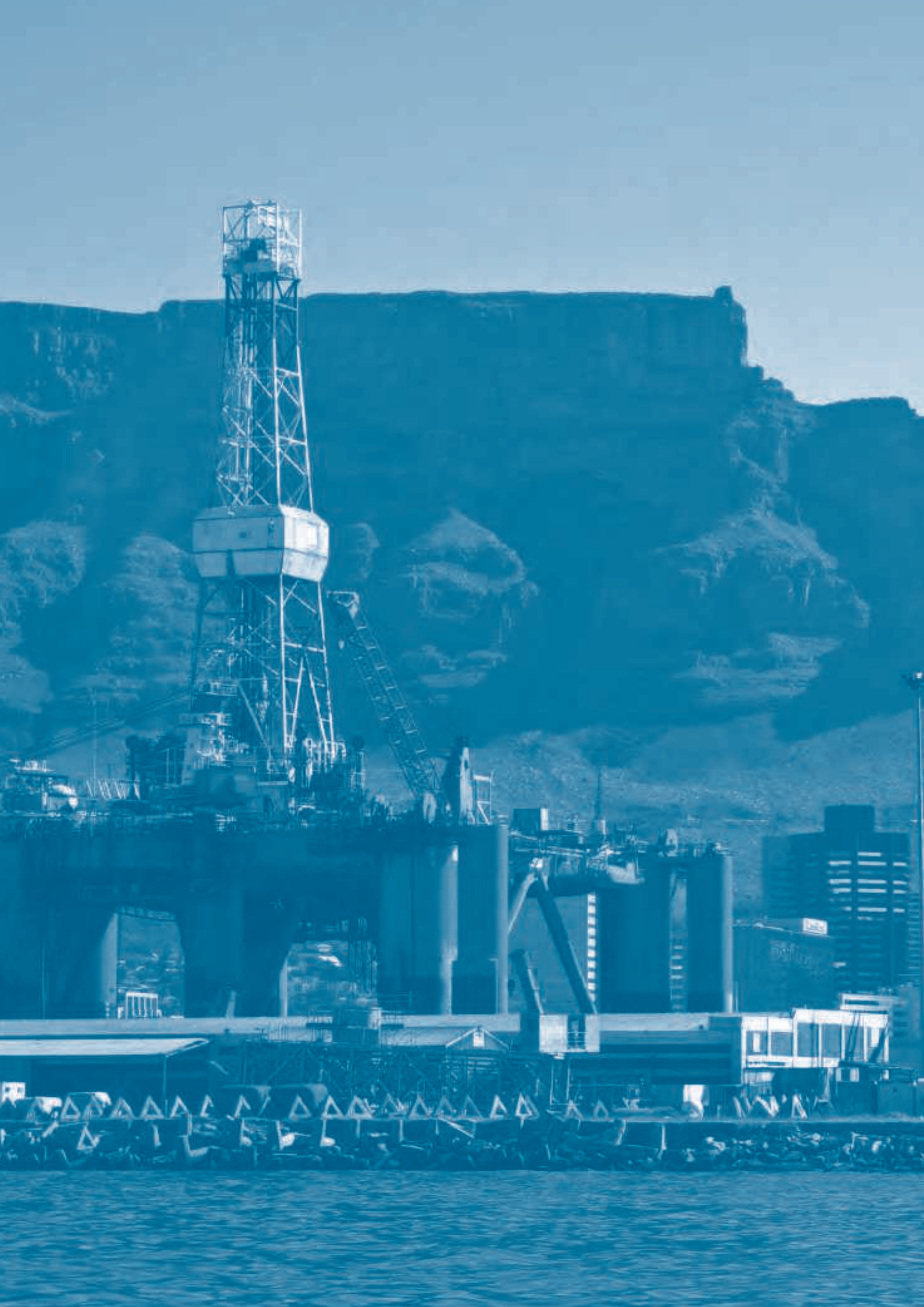

VOFXSERIES

INTERCHANGE > **Similar Couplings (Oil & Gas)**

Stucchi®

BOP

TECHNICAL FEATURES AND OPTIONS

Interchange
Similar Couplings (Oil & Gas)

Sealing description
Nitrile NBR

Connection system
Screw

Available sizes
From 3/4" to 2"

Material
Stainless steel (AISI 316L)

Available threads
NPT - BSP

Operating pressure
Up to 207 bar

Locking mechanism
Screw to connect

Flow rate
Up to 1100 l/min

Temperature (°C)
-20°C / +100°C

Valving style
Poppet

Connection under pressure
Connection: one side
Disconnection: not allowed

BENEFITS

- Connection under residual pressure is allowed in one side.
- Inspection hole to control if the coupling is completely connected.
- All dimensions of Stucchi VOFX series are certified with Lloyd Type Approval in accordance with API 16D at specific rating pressure of 207 bar/3000 PSI.
- New treatment on the threads to avoid premature wearing.
- Wrench flat on the bodies to facilitate the fitting assembly.
- The poppet valve with elastomer seal provides maximum sealing of the couplings when disconnected.
- Retainer in stainless steel material.
- Shape of internal parts is designed to reduce turbulence and pressure drop.
- High resistance to pressure impulses (500.000 connected).
- Compact design.
- Simple to use.

HOW TO USE

- Before to connect, clean the mating surface of the couplings and spread anti galling paste on the thread.
- To connect insert the nipple in the coupler, screw the sleeve until positive stop (surface contact of two moving parts), do not push together the couplings, screw only.
- The use of tools for the second part of the connection can be necessary if there is high residual pressure in the circuit.
- Check inspection holes to ensure that the coupling is fully connected (no free space allowed).
- To disconnect unscrew totally the sleeve from the nipple.

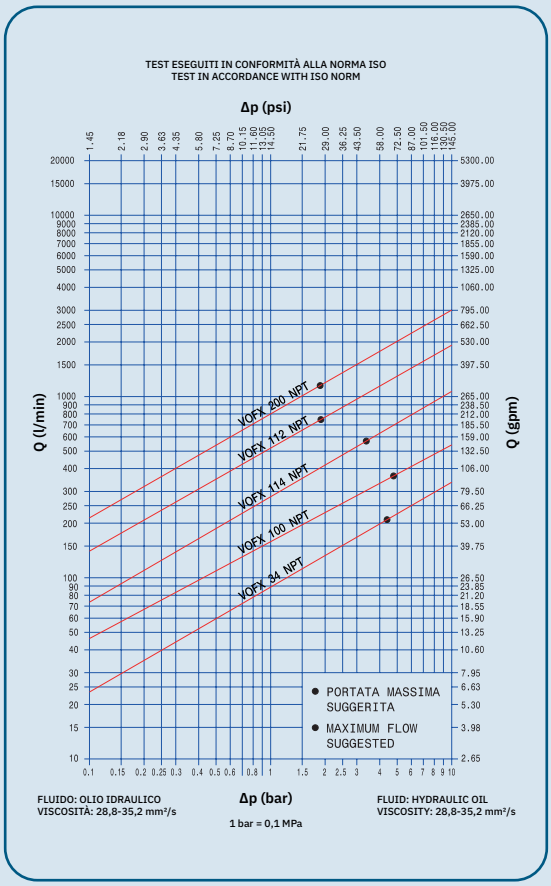

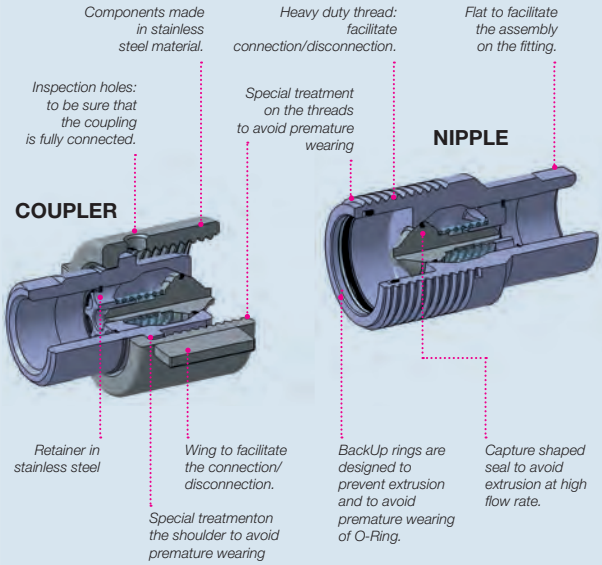

MAIN APPLICATIONS

Stucchi®

PERFORMANCES

Size		Series/Size	Max. flow suggested		Manual connect torque*		Manual disconnect torque*		Spillage**
in	mm		l/min	gpm	Nm	lbf ft	Nm	lbf ft	ml
3/4”	20	VOFX34	212	56,18	2,3	1,70	2,3	1,70	11,5
1”	25	VOFX100	378	100,17	2,5	1,84	2,5	1,84	21,2
1-1/4”	31,5	VOFX114	576	152,64	3	2,21	3	2,21	42,3
1-1/2”	40	VOFX112	758	200,87	15,1	11,14	15,2	11,21	82,6
2”	50	VOFX200	1100	291,50	10	7,38	10	7,38	192,0

Size	Series/Size	Max. operating pressure						Burst pressure					
		Coupled		Nipple		Coupler		Coupled		Nipple		Coupler	
in		MPa	psi	MPa	psi	MPa	psi	MPa	psi	MPa	psi	MPa	psi
3/4”	VOFX34	20,7	3000	20,7	3000	20,7	3000	82,8	12000	62,1	9000	62,1	9000
1”	VOFX100	20,7	3000	20,7	3000	20,7	3000	82,8	12000	62,1	9000	62,1	9000
1-1/4”	VOFX114	20,7	3000	20,7	3000	20,7	3000	82,8	12000	62,1	9000	62,1	9000
1-1/2”	VOFX112	20,7	3000	20,7	3000	20,7	3000	82,8	12000	62,1	9000	62,1	9000
2”	VOFX200	20,7	3000	20,7	3000	20,7	3000	82,8	12000	62,1	9000	41,4	6000

* Connect torque and disconnect torque without residual pressure. The torque to connect increase with increasing of internal residual pressure.

** Spillage is an indicative value of the fluid loss per couple-uncouple cycle without residual pressure.

BOP Only configurations mentioned in the dedicated BOP section of this catalog are BOP certified.
For complete technical information please contact Stucchi Technical Support.

Different possible configurations:
SAE thread available upon request.

Material:
- Construction: Stainless steel AISI 316L
- Springs and elastic rings: AISI 302

Temperature range:
Standard seals NBR from -20°C to +100°C (from -4°F to +212°F).
Seals in NBR (Nitrile) with water from +5°C to +60°C (from +41°F to +140°F).
Please read carefully Instructions and warnings for proper selection of the products.

Tests performed:
Qualification tests have been performed with hydraulic oil using couplings with NBR (Nitrile) seals.
The max. operating pressure have been verified fo 500.000 impulses according to ISO norm test method
The couplings uncoupled have been tested for 100.000 impulses.

WARNING

A defect, a wrong choice or an improper use of products, can cause injury to persons, animals and objects.
Never connect or disconnect with dynamic pressure (e.g. pump on).
Do not couple-uncouple with flow in the circuit.
Do not couple-uncouple when the temperature inside of the circuit is higher than 80 °C (176 °F).
Do not use with fluids below the freezing point to avoid damages due to ice expansion and consequential extrusion of the valving.
Do not use the coupling disconnected with high impulse pressure.
Connect under pressure products are suitable to be connected under residual (static) pressure.
Connection with residual pressure (pressure trapped in the circuit) allowed with other side coupling to drain.
Check the maximum allowable working pressure of the port in use.
Make sure that the medium used is compatible with seal and material as indicated for each series.
In case of doubt please contact Stucchi Technical Support.
The interchangeability is mentioned under the assumption that the manufacturer of the considered products has not changed any dimension.
It is mandatory to carefully read and closely follow the instructions before selecting or using any Stucchi products.
Always refer to the version uploaded in the Instructions and warning section of stucchigroup.com website for the latest release.
For specific, product-related, instructions, please contact Stucchi technical service.

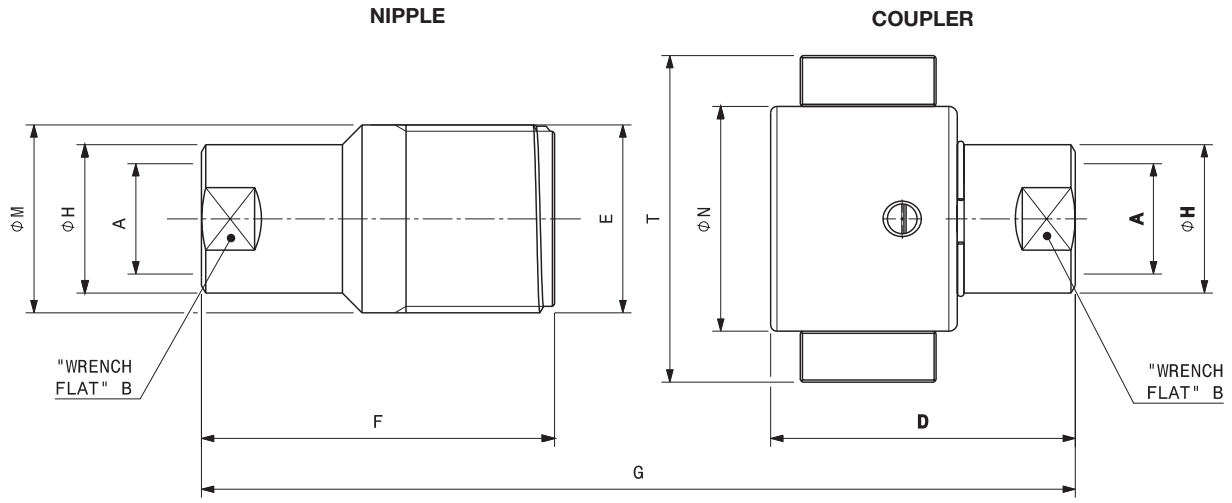

Port description: FEMALE THREAD NPT (ANSI B.1.20.1)

BODY SIZE	Descriptive Code	Item Code		PORT (A)	Thread		Overall Length			Length			Hex			Diameter		
								mm	in		mm	in		mm	in		mm	in
3/4"	VOFX34 NPT	Nipple	811201050	3/4"	E	1 3/4-8* special	G	123,6	4,87	F	83,2	3,28	B	31,8	1,25	H	35,0	1,38
	VOFX34 NPT	Coupler	811201051							D	71,8	2,83						
1"	VOFX100 NPT	Nipple	811201052	1"	E	2 1/4-6 Stub ACME	G	152,9	6,02	F	105,8	4,17	B	41,3	1,63	H	45,0	1,77
	VOFX100 NPT	Coupler	811201053							D	87,3	3,44						
1-1/4"	VOFX114 NPT	Nipple	811201054	1-1/4"	E	2 5/8-6 Stub ACME	G	197,9	7,79	F	136,7	5,38	B	50,8	2,00	H	54,5	2,15
	VOFX114 NPT	Coupler	811201055							D	112,4	4,43						
1-1/2"	VOFX112 NPT	Nipple	811201056	1-1/2"	E	3 1/4-4 Stub ACME	G	220,3	8,67	F	151,2	5,95	B	57,2	2,25	H	63,5	2,50
	VOFX112 NPT	Coupler	811201057							D	126,9	5,00						
2"	VOFX200 NPT	Nipple	811201058	2"	E	4-4 Stub ACME	G	255,2	10,05	F	179,0	7,05	B	76,2	3,00	H	82,6	3,25
	VOFX200 NPT	Coupler	811201059							D	154,2	6,07						

BODY SIZE	Descriptive Code	Item Code		Diameter			Max overall dimension			Weight	
					mm	in		mm	in	kg	lb
3/4"	VOFX34 NPT	Nipple	811201050	M	44,3	1,74				0,48	1,05
	VOFX34 NPT	Coupler	811201051	N	53,0	2,09	T	77,0	3,03	0,61	1,34
1"	VOFX100 NPT	Nipple	811201052	M	57,2	2,25				1,19	2,62
	VOFX100 NPT	Coupler	811201053	N	69,0	2,72	T	109,0	4,29	1,38	3,03
1-1/4"	VOFX114 NPT	Nipple	811201054	M	66,7	2,62				1,95	4,30
	VOFX114 NPT	Coupler	811201055	N	80,0	3,15	T	120,0	4,72	2,27	5,01
1-1/2"	VOFX112 NPT	Nipple	811201056	M	82,6	3,25				3,22	7,11
	VOFX112 NPT	Coupler	811201057	N	95,0	3,74	T	145,0	5,71	3,84	8,47
2"	VOFX200 NPT	Nipple	811201058	M	101,6	4,00				6,04	13,32
	VOFX200 NPT	Coupler	811201059	N	122,5	4,82	T	182,5	7,19	8,10	17,86

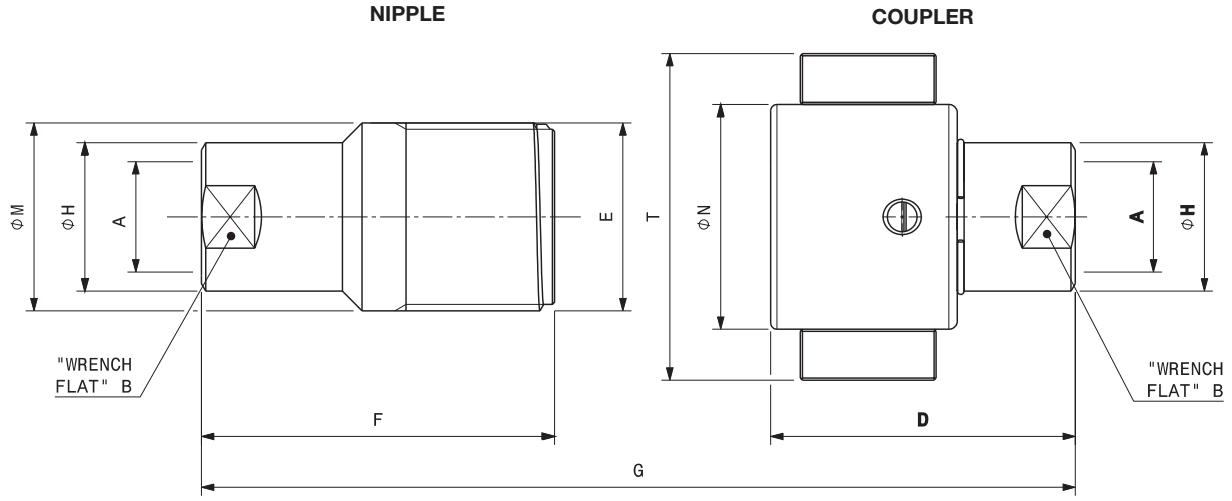

Port description: FEMALE THREAD BSPP (ISO 1179-1)

BODY SIZE	Descriptive Code	Item Code		PORT (A)		Thread	Overall Length			Length			Hex			Diameter		
								mm	in		mm	in		mm	in		mm	in
3/4"	VOFX34 BSP	Nipple	811200050	3/4"	E	1 3/4-8* special	G	123,6	4,87	F	83,2	3,28	B	31,8	1,25	H	35,0	1,38
	VOFX34 BSP	Coupler	811200051							D	71,8	2,83						
1"	VOFX100 BSP	Nipple	811200052	1"	E	2 1/4-6 Stub ACME	G	152,9	6,02	F	105,8	4,17	B	41,3	1,63	H	45,0	1,77
	VOFX100 BSP	Coupler	811200053							D	87,3	3,44						
1-1/4"	VOFX114 BSP	Nipple	811200054	1-1/4"	E	2 5/8-6 Stub ACME	G	197,9	7,79	F	136,7	5,38	B	50,8	2,00	H	54,5	2,15
	VOFX114 BSP	Coupler	811200055							D	112,4	4,43						
1-1/2"	VOFX112 BSP	Nipple	811200056	1-1/2"	E	3 1/4-4 Stub ACME	G	220,3	8,67	F	151,2	5,95	B	57,2	2,25	H	63,5	2,50
	VOFX112 BSP	Coupler	811200057							D	126,9	5,00						
2"	VOFX200 BSP	Nipple	811200058	2"	E	4-4 Stub ACME	G	255,2	10,05	F	179,0	7,05	B	76,2	3,00	H	82,6	3,25
	VOFX200 BSP	Coupler	811200059							D	154,2	6,07						

BODY SIZE	Descriptive Code	Item Code		Diameter			Overall dimension			Weight	
					mm	in		mm	in	kg	lb
3/4"	VOFX34 BSP	Nipple	811200050	M	44,3	1,74				0,48	1,05
	VOFX34 BSP	Coupler	811200051	N	53,0	2,09	T	77,0	3,03	0,61	1,34
1"	VOFX100 BSP	Nipple	811200052	M	57,2	2,25				1,19	2,62
	VOFX100 BSP	Coupler	811200053	N	69,0	2,72	T	109,0	4,29	1,38	3,03
1-1/4"	VOFX114 BSP	Nipple	811200054	M	66,7	2,62				1,95	4,30
	VOFX114 BSP	Coupler	811200055	N	80,0	3,15	T	120,0	4,72	2,27	5,01
1-1/2"	VOFX112 BSP	Nipple	811200056	M	82,6	3,25				3,22	7,11
	VOFX112 BSP	Coupler	811200057	N	95,0	3,74	T	145,0	5,71	3,84	8,47
2"	VOFX200 BSP	Nipple	811200058	M	101,6	4,00				6,04	13,32
	VOFX200 BSP	Coupler	811200059	N	122,5	4,82	T	182,5	7,19	8,10	17,86

SPARE KIT SEAL FOR NIPPLE

Repair kit / OR+BK		
Body Size	Description	Part Number
3/4”	VOFX34	815700956
1”	VOFX100	815700958
1-1/4”	VOFX114	815700960
1-1/2”	VOFX112	815701122
2”	VOFX200	815700964

O-Ring in Nitrile
BackUp in Teflon®

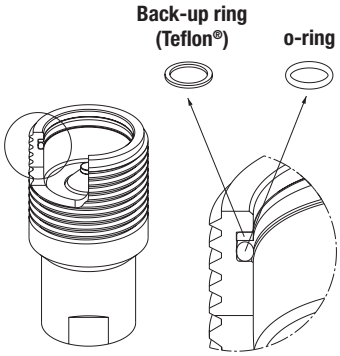

SPARE KIT INTERNAL PARTS

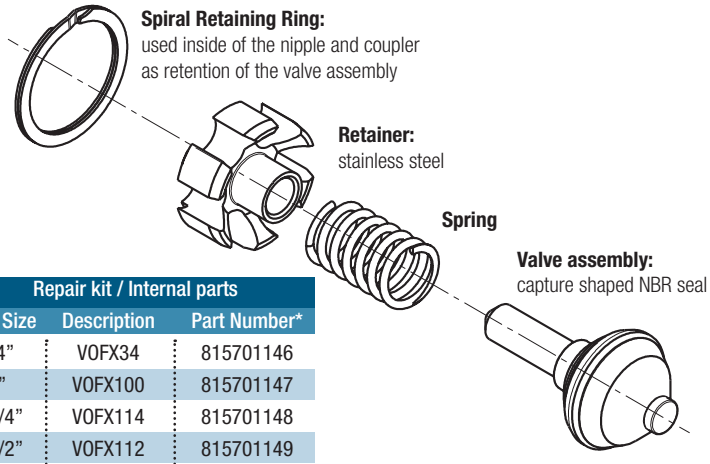

Repair kit / Internal parts		
Body Size	Description	Part Number*
3/4”	VOFX34	815701146
1”	VOFX100	815701147
1-1/4”	VOFX114	815701148
1-1/2”	VOFX112	815701149
2”	VOFX200	815701150

*same codes for coupler or nipple

PROTECTIVE CAPS FOR VOFX SERIES

Protective caps are always recommended to protect the couplings from damage, dirt inclusion, and will increase the product life.
This is particularly important in Oil&Gas and mobile applications where exposure to weather and aggregate materials are common.
The protective caps for VOFX couplings are manufactured in aluminum (natural color).
Upon request also caps manufactured in stainless steel version.

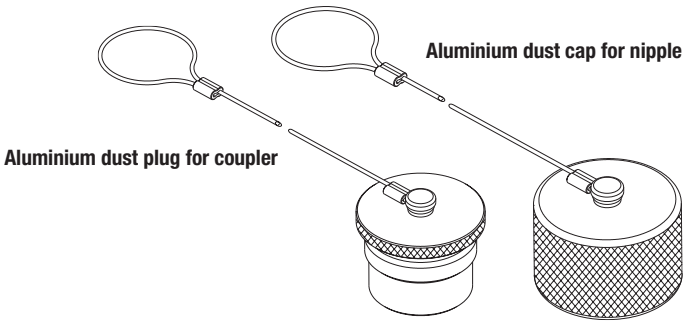

Protective Cap			
Body Size/Description	Part Number		Material/Color
	Plug for Coupler	Cap for Nipple	
3/4”	815405013	815405012	Aluminum/Natural
1”	815405011	815405010	Aluminum/Natural
1-1/4”	815405015	815405014	Aluminum/Natural
1-1/2”	815405017	815405016	Aluminum/Natural
2”	815405019	815405018	Aluminum/Natural

STUCCHI Quick Couplings Catalog - December 2024 - All right reserved.
Texts, data and illustrations mentioned in this catalogue may be changed by Stucchi at any time, without notice; always refer to the version uploaded on the English version of stucchigroup.com/en website for the latest release. In case of doubt, please contact Stucchi technical service.

VRSERIES

INTERCHANGE > **Similar Couplings (type “Rohrleitung”)**

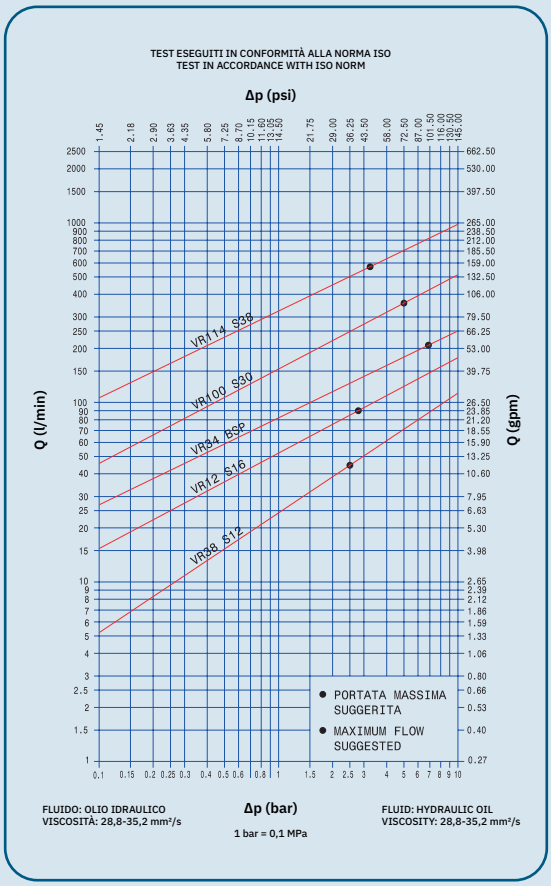

TECHNICAL FEATURES AND OPTIONS

Interchange
Similar Couplings (type “Rohrleitung”)

Sealing description
Nitrile NBR

Connection system
Screw

Available sizes
From 3/8” to 1-1/4”

Material /treatment
Carbon steel /Cr3

Available threads
METRIC

Operating pressure
Up to 420 bar

Locking mechanism
Screw to connect

Flow rate
Up to 576 l/min

Temperature (°C)
-20°C / +100°C

Valving style
Flat face
Non spill

Connection under pressure
Connection: one side
Disconnection: not allowed

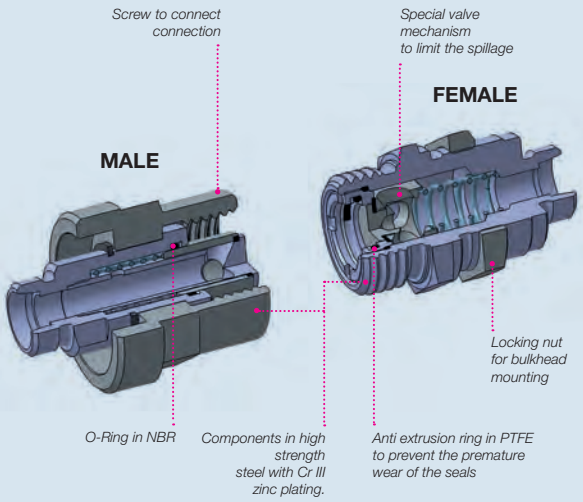

BENEFITS

- Connection is allowed with residual pressure in one side of the coupling (max 10 MPa in one side, 4 MPa for size 1-1/4).
- Robustness and ease of construction.
- Special valves ensure a good seal of the coupling disconnected and minimize spillage of fluid.
- Shape of internal parts is designed to reduce turbulence and pressure drop.
- External sleeve protects the sealing surface of the male body
- Good resistance to pressure impulses.
- Compact design.
- Simple to use.

HOW TO USE

- Before to connect, clean the mating surface of the couplings to avoid dirt inclusion in the circuit.
- To connect insert the male coupling in the female coupling, screw the sleeve till the stop, do not push together the couplings, screw only.
- The use of tools for the second part of the connection can be necessary if there is high residual pressure in the circuit.
- To disconnect unscrew totally the sleeve from the female coupling.

MAIN APPLICATIONS

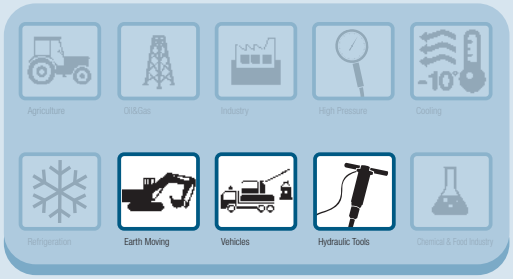

Stucchi®

PERFORMANCES

Size		Series/Size	Max. flow suggested		Manual connect torque*		Manual disconnect torque*		Spillage**
in	mm		l/min	gpm	Nm	lbf ft	Nm	lbf ft	ml
3/8	10	VR38	46	12,19	2	1,47	1,8	1,33	0,01
1/2	12,5	VR12	90	23,85	1,3	0,96	0,7	0,52	0,02
3/4	20	VR34	212	56,2	2,2	1,62	1,7	1,25	0,4
1	25	VR100	378	100,21	4,3	3,17	2,5	1,84	1
1-1/4	31,5	VR114	576	152,7	6	4,42	4	2,95	1

Size	Series/Size	Max. operating pressure						Burst pressure					
		Coupled		Male		Female		Coupled		Male		Female	
in		MPa	psi	MPa	psi	MPa	psi	MPa	psi	MPa	psi	MPa	psi
3/8	VR38	40	5800	20	2900	40	5800	160	23200	70	10150	100	14500
1/2	VR12	30	4350	17	2465	30	4350	120	17400	70	10150	100	14500
3/4	VR34	35	5075	20	2900	35	5075	140	20300	80	11600	100	14500
1	VR100	30	4350	20	2900	30	4350	100	14500	80	11600	100	14500
1-1/4	VR114	42	6090	42	6090	42	6090	120	17400	90	13050	100	14500

* Connect torque and disconnect torque without residual pressure. The torque will increase as internal residual pressure increases.
** Spillage is an indicative value of the fluid loss during disconnection (according to ISO norm test method).

Different possible configurations:
Zn-Ni treatment is avaiable upon request.
Different threads available upon request.

Temperature range:
Standard seals NBR (Nitrile): from -20 °C to +100 °C (from -4 °F to +212 °F).
Please read carefully Instructions and warnings for proper selection of the products.

Tests performed:
Qualification tests have been performed with hydraulic oil using couplings with NBR (Nitrile) seals.
The max. operating pressure have been verified fo 200.000 impulses according to ISO norm test method.

⚠ WARNING

A defect, a wrong choice or an improper use of products, can cause injury to persons, animals and objects.
Never connect or disconnect with dynamic pressure (e.g. pump on).
Do not couple-uncouple with flow in the circuit.
Do not couple-uncouple when the temperature inside of the circuit is higher than 80 °C (176 °F).
Do not use the coupling disconnected with high impulse pressure.
Connect under pressure products are suitable to be connected under residual (static) pressure.
Connection with residual pressure (pressure trapped in the circuit) allowed with other side coupling to drain.
Check the maximum allowable working pressure of the port in use.
Make sure that the medium used is compatible with seal and material as indicated for each series.
In case of doubt please contact Stucchi Technical Support.
The interchangeability is mentioned under the assumption that the manufacturer of the considered products has not changed any dimension.
It is mandatory to carefully read and closely follow the instructions before selecting or using any Stucchi products.
Always refer to the version uploaded in the Instructions and warning section of stucchigroup.com website for the latest release.
For specific, product-related, instructions, please contact Stucchi technical service.

Stucchi®

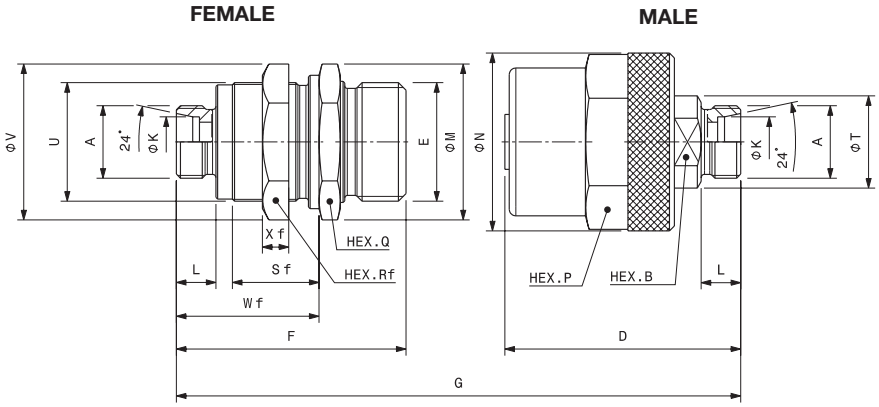

Port description: MALE THREAD METRIC L – 24° CONE (ISO 8434-1 & DIN 2353)

BODY SIZE	Descriptive Code	Item Code		BG	PORT (A)	U	E	Overall Length			Length			Hex			Hex			Diameter			Diameter		
									mm	in		mm	in		mm	in		mm	in		mm	in		mm	in
3/8"	F VR38 L10	Female	809608002	2	M16X1.5	M30X1	32X3 SP*	G	107,5	4,23	F	60,0	2,36	Q	36,0	1,42	Rf	36,0	1,42	M	41,4	1,63	K	10,2	0,40
	M VR38 L10	Male	809608003								D	61,6	2,43	P	32,0	1,26	B	22,0	0,87	N	38,7	1,52			
3/8"	F VR38 L12	Female	809608004	2	M18X1.5	M30X1	32X3 SP*	G	107,5	4,23	F	60,0	2,36	Q	36,0	1,42	Rf	36,0	1,42	M	41,4	1,63	K	12,2	0,48
	M VR38 L12	Male	809608005								D	61,6	2,43	P	32,0	1,26	B	22,0	0,87	N	38,7	1,52			
3/8"	F VR38 L15	Female	809608006	2	M22X1.5	M30X1	32X3 SP*	G	109,5	4,31	F	61,0	2,40	Q	36,0	1,42	Rf	36,0	1,42	M	41,4	1,63	K	15,2	0,60
	M VR38 L15	Male	809608007								D	62,6	2,46	P	32,0	1,26	B	22,0	0,87	N	38,7	1,52			
1/2"	F VR12P L15	Female	809608026	3	M22X1.5	M36X1	36X3 SP*	G	124,6	4,91	F	70,5	2,78	Q	41,0	1,61	Rf	41,0	1,61	M	47,2	1,86	K	15,2	0,60
	M VR12 L15	Male	809608001								D	71,6	2,82	P	46,0	1,81	B	24,0	0,94	N	54,0	2,13			
3/4"	F VR34 L15	Female	809608016	4	M22X1.5	M45x1.5	48x3 SP*	G	150,1	5,91	F	90,1	3,55	Q	55,0	2,17	Rf	50,0	1,97	M	61,0	2,40	K	15,2	0,60
	M VR34 L15	Male	809608017								D	84,1	3,31	P	60,0	2,36	B	32,0	1,26	N	68,0	2,68			
3/4"	F VR34 L18	Female	809608018	4	M26x1.5	M45x1.5	48x3 SP*	G	150,1	5,91	F	90,1	3,55	Q	55,0	2,17	Rf	50,0	1,97	M	61,0	2,40	K	18,2	0,72
	M VR34 L18	Male	809608019								D	84,1	3,31	P	60,0	2,36	B	32,0	1,26	N	68,0	2,68			
1"	F VR100 L18	Female	809608008	6	M26X1.5	M54X1.5	54X4 SP*	G	174,5	6,87	F	96,2	3,79	Q	55,0	2,17	Rf	60,0	2,36	M	62,2	2,45	K	18,2	0,72
	M VR100 L18	Male	809608009								D	107,0	4,21	P	55,0	2,17	B	41,0	1,61	N	64,0	2,52			
1"	F VR100 L22	Female	809608010	6	M30X2	M54X1.5	54X4 SP*	G	178,5	7,03	F	98,2	3,87	Q	55,0	2,17	Rf	60,0	2,36	M	62,2	2,45	K	22,2	0,87
	M VR100 L22	Male	809608011								D	109,0	4,29	P	55,0	2,17	B	41,0	1,61	N	64,0	2,52			
1"	F VR100 L28	Female	809608012	6	M36X2	M54X1.5	54X4 SP*	G	178,5	7,03	F	98,2	3,87	Q	55,0	2,17	Rf	60,0	2,36	M	62,2	2,45	K	28,2	1,11
	M VR100 L28	Male	809608013								D	109,0	4,29	P	55,0	2,17	B	41,0	1,61	N	64,0	2,52			
1-1/4"	F VR114 L35	Female	809608014	8	M45x2	M80x2	79x4 SP*	G	213,5	8,39	F	123,0	4,84	Q	85,0	3,35	Rf	90,5Δ	3,56Δ	M	90,0	3,54	K	35,3	1,39
	M VR114 L35	Male	809608015								D	130,4	5,13	P	Δ	Δ	B	55,0	2,17	N	89,7	3,53			

BODY SIZE	Descriptive Code	Item Code		Diameter			Length			Length			Length			Weight	
					mm	in		mm	in		mm	in		mm	in	kg	lb
3/8"	F VR38 L10	Female	809608002	V	41,4	1,63	Wf	36,0	1,42	Sf	19,0	0,75	Xf	7,0	0,43	0,23	0,51
	M VR38 L10	Male	809608003	T	25,0	0,98							L	11,0	0,28	0,29	0,63
3/8"	F VR38 L12	Female	809608004	V	41,4	1,63	Wf	36,0	1,42	Sf	19,0	0,75	Xf	7,0	0,43	0,24	0,52
	M VR38 L12	Male	809608005	T	25,0	0,98							L	11,0	0,28	0,28	0,61
3/8"	F VR38 L15	Female	809608006	V	41,4	1,63	Wf	37,0	1,46	Sf	19,0	0,75	Xf	7,0	0,47	0,24	0,53
	M VR38 L15	Male	809608007	T	25,0	0,98							L	12,0	0,28	0,29	0,64
1/2"	F VR12P L15	Female	809608026	V	47,2	1,86	Wf	40,1	1,58	Sf	22,4	0,88	Xf	8,0	0,47	0,36	0,80
	M VR12 L15	Male	809608001	T	28,0	1,10							L	12,0	0,31	0,53	1,16
3/4"	F VR34 L15	Female	809608016	V	57,5	2,26	Wf	55,1	2,17	Sf	28,0	1,10	Xf	9,0	0,47	0,36	0,79
	M VR34 L15	Male	809608017	T	38,0	1,50							L	12,0	0,35	0,53	1,16
3/4"	F VR34 L18	Female	809608018	V	57,5	2,26	Wf	55,1	2,17	Sf	28,0	1,10	Xf	9,0	0,47	0,74	1,63
	M VR34 L18	Male	809608019	T	38,0	1,50							L	12,0	0,35	0,85	1,86
1"	F VR100 L18	Female	809608008	V	69,0	2,72	Wf	53,0	2,09	Sf	22,8	0,90	Xf	10,0	0,47	0,98	2,16
	M VR100 L18	Male	809608009	T	44,9	1,77							L	12,0	0,39	1,32	2,91
1"	F VR100 L22	Female	809608010	V	69,0	2,72	Wf	55,0	2,17	Sf	22,8	0,90	Xf	10,0	0,55	0,99	2,18
	M VR100 L22	Male	809608011	T	44,9	1,77							L	14,0	0,39	1,32	2,91
1"	F VR100 L28	Female	809608012	V	69,0	2,72	Wf	55,0	2,17	Sf	22,8	0,90	Xf	10,0	0,55	0,96	2,12
	M VR100 L28	Male	809608013	T	44,9	1,77							L	14,0	0,39	1,33	2,93
1-1/4"	F VR114 L35	Female	809608014	V	100,0	3,94	Wf	65,0	2,56	Sf	35,0	1,38	Xf	14,0	0,63	2,83	6,24
	M VR114 L35	Male	809608015	T	60,8	2,39							L	16,0	0,55	3,27	7,21

*SP = SPECIAL THREAD

Δ to mount with a sickle spanner

Stucchi®

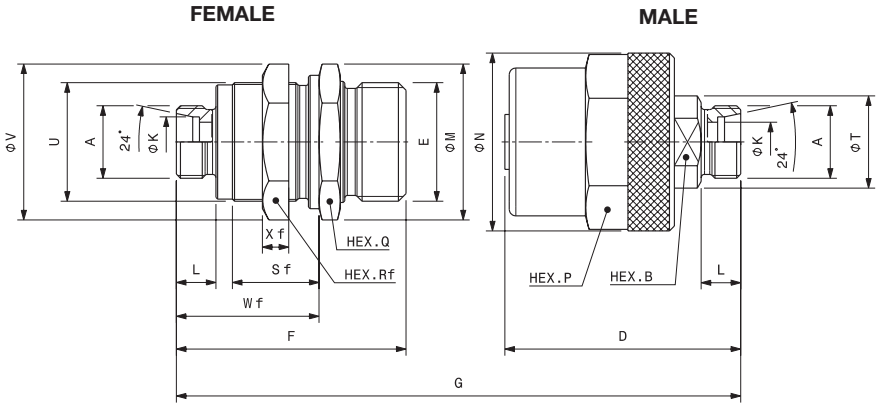

Port description: MALE THREAD METRIC S – 24° CONE (ISO 8434-1 & DIN 2353)

BODY SIZE	Descriptive Code	Item Code		BG	PORT (A)	U	E	Overall Length			Length			Hex			Hex			Diameter			Diameter		
									mm	in		mm	in		mm	in		mm	in		mm	in		mm	in
3/8"	F VR38 S10	Female	809609002 ♦	2	M18X1.5	M30X1	32X3 SP*	G	109,5	4,65	F	61,0	2,40	Q	36,0	1,42	Rf	36,0	1,42	M	41,4	1,63	K	10,2	0,40
	M VR38 S10	Male	809609003 ♦								D	62,6	2,46	P	32	1,26	B	22	0,87	N	38,7	1,52			
3/8"	F VR38 S12	Female	809609004	2	M20X1.5	M30X1	32X3 SP*	G	109,5	4,31	F	61,0	2,40	Q	36,0	1,42	Rf	36,0	1,42	M	41,4	1,63	K	12,2	0,48
	M VR38 S12	Male	809609005								D	62,6	2,46	P	32,0	1,26	B	22,0	0,87	N	38,7	1,52			
3/8"	F VR38 S14	Female	809609006	2	M22X1.5	M30X1	32X3 SP*	G	113,5	4,47	F	63,0	2,48	Q	36,0	1,42	Rf	36,0	1,42	M	41,4	1,63	K	14,2	0,56
	M VR38 S14	Male	809609007								D	64,6	2,54	P	32,0	1,26	B	22,0	0,87	N	38,7	1,52			
3/8"	F VR38 S16	Female	809609016	2	M24X1.5	M30X1	32X3 SP*	G	113,5	4,47	F	63,0	2,48	Q	36,0	1,42	Rf	36,0	1,42	M	41,4	1,63	K	16,2	0,64
	M VR38 S16	Male	809609017								D	64,6	2,54	P	32,0	1,26	B	22,0	0,87	N	38,7	1,52			
1/2"	F VR12P S16	Female	809609028	3	M24X1.5	M36X1	36X3 SP*	G	128,6	5,06	F	72,5	2,85	Q	41,0	1,61	Rf	41,0	1,61	M	47,2	1,86	K	16,2	0,64
	M VR12 S16	Male	809609001								D	73,6	2,90	P	46,0	1,81	B	24,0	0,94	N	54,0	2,13			
1/2"	F VR12P S20	Female	809609030	3	M30x2	M36X1	36X3 SP*	G	157,8	6,21	F	74,5	29,33	Q	41,0	1,61	Rf	41,0	1,61	M	47,2	1,86	K	20,2	0,80
	M VR12 S20	Male	809609027**								D	100,8	3,97	P	46,0	1,81	B	32,0	1,26	N	54,0	2,13			
3/4"	F VR34 S16	Female	809609020 ♦	4	M24X1.5	M45x1.5	48x3 SP*	G	154,1	6,09	F	92,1	3,64	Q	55	2,17	Rf	50	1,97	M	38,7	1,52	K	16,2	0,64
	M VR34 S16	Male	809609021 ♦								D	86,1	3,39	P	60,0	2,36	B	32,0	1,26	N	68,0	2,68			
3/4"	F VR34 S20	Female	809609018	4	M30X2	M45x1.5	48x3 SP*	G	158,1	6,22	F	94,1	3,70	Q	55,0	2,17	Rf	50,0	1,97	M	61,0	2,40	K	20,2	0,80
	M VR34 S20	Male	809609019								D	88,1	3,47	P	60,0	2,36	B	32,0	1,26	N	68,0	2,68			
1"	F VR100 S20	Female	809609008	6	M30X2	M54X1.5	54X4 SP*	G	182,5	7,19	F	100,2	3,94	Q	55,0	2,17	Rf	60,0	2,36	M	62,2	2,45	K	20,2	0,80
	M VR100 S20	Male	809609009								D	111,0	4,37	P	55,0	2,17	B	41,0	1,61	N	64,0	2,52			
1"	F VR100 S25	Female	809609010	6	M36X2	M54X1.5	54X4 SP*	G	186,5	7,34	F	102,2	4,02	Q	55,0	2,17	Rf	60,0	2,36	M	62,2	2,45	K	25,2	0,99
	M VR100 S25	Male	809609011								D	113,0	4,45	P	55,0	2,17	B	41,0	1,61	N	64,0	2,52			
1"	F VR100 S30	Female	809609012	6	M42X2	M54X1.5	54X4 SP*	G	190,5	7,50	F	104,2	4,10	Q	55,0	2,17	Rf	60,0	2,36	M	62,2	2,45	K	30,2	1,19
	M VR100 S30	Male	809609013								D	115,0	4,53	P	55,0	2,17	B	41,0	1,61	N	64,0	2,52			
1-1/4"	F VR114 S38	Female	809609014	8	M52X2	M80X2	79X4 SP*	G	225,15	8,86	F	129,0	5,08	Q	85,0	3,35	Rf	90,5Δ	3,56Δ	M	90,0	3,54	K	38,3	1,51
	M VR114 S38	Male	809609015								D	136,4	5,37	P	Δ	Δ	B	55,0	2,17	N	89,7	3,53			

BODY SIZE	Descriptive Code	Item Code		Diameter			Length			Length			Length			Weight	
					mm	in		mm	in		mm	in		mm	in	kg	lb
3/8"	F VR38 S10	Female	809609002 ♦	V	41,4	1,63	Wf	37,0	1,46	Sf	19,0	0,75	Xf	7,0	0,28	0,24	0,11
	M VR38 S10	Male	809609003 ♦	T	-	-							L	12,0	0,47	-	-
3/8"	F VR38 S12	Female	809609004	V	41,4	1,63	Wf	37,0	1,46	Sf	19,0	0,75	Xf	7,0	0,28	0,25	0,54
	M VR38 S12	Male	809609005	T	25,0	0,98							L	12,0	0,47	0,29	0,64
3/8"	F VR38 S14	Female	809609006	V	41,4	1,63	Wf	39,0	1,54	Sf	19,0	0,75	Xf	7,0	0,28	0,25	0,54
	M VR38 S14	Male	809609007	T	25,0	0,98							L	14,0	0,55	0,29	0,64
3/8"	F VR38 S16	Female	809609016	V	41,4	1,63	Wf	39,0	1,54	Sf	19,0	0,75	Xf	7,0	0,28	0,25	0,55
	M VR38 S16	Male	809609017	T	25,0	0,98							L	14,0	0,55	0,30	0,66
1/2"	F VR12P S16	Female	809609028	V	47,2	1,86	Wf	42,1	1,66	Sf	22,4	0,88	Xf	8,0	0,31	0,37	0,82
	M VR12 S16	Male	809609001	T	28,0	1,10							L	14,0	0,55	0,54	1,18
1/2"	F VR12 S20	Female	809609030	V	47,1	1,86	Wf	44,1	1,74	Sf	22,5	0,89	Xf	8,0	0,31	0,38	0,84
	M VR12 S20	Male	809609027**	T	35,0	1,38							L	16,0	0,63	0,67	1,48
3/4"	F VR34 S16	Female	809609020 ♦	V	-	-	Wf	-	-	Sf	-	-	Xf	-	-	-	-
	M VR34 S16	Male	809609021 ♦	T	38,0	1,50							L	14,0	0,55	0,85	1,87
3/4"	F VR34 S20	Female	809609018	V	57,5	2,26	Wf	59,1	2,33	Sf	28,0	1,10	Xf	9,0	0,35	0,37	0,82
	M VR34 S20	Male	809609019	T	38,0	1,50							L	16,0	0,63	0,87	1,91
1"	F VR100 S20	Female	809609008	V	69,0	2,72	Wf	57,0	2,24	Sf	22,8	0,90	Xf	10,0	0,39	1,01	2,23
	M VR100 S20	Male	809609009	T	44,9	1,77							L	16,0	0,63	1,34	2,95
1"	F VR100 S25	Female	809609010	V	69,0	2,72	Wf	59,0	2,32	Sf	22,8	0,90	Xf	10,0	0,39	1,01	2,23
	M VR100 S25	Male	809609011	T	44,9	1,77		-					L	18,0	0,71	1,36	3,00
1"	F VR100 S30	Female	809609012	V	69,0	2,72	Wf	61,0	2,40	Sf	22,8	0,90	Xf	10,0	0,39	1,02	2,24
	M VR100 S30	Male	809609013	T	44,9	1,77							L	20,0	0,79	1,38	3,03
1-1/4"	F VR114 S38	Female	809609014	V	100,0	3,94	Wf	71,0	2,80	Sf	35,0	1,38	Xf	14,0	0,55	2,89	6,37
	M VR114 S38	Male	809609015	T	60,8	2,39							L	22,0	0,87	3,31	7,30

SP* = SPECIAL THREAD
Δ to mount with a sickle spanner
** = longer design with modular thread
♦Available upon request.

SPARE KIT SEAL FOR FEMALE

Repair kit / OR+BK		
Body Size	Description	Part Number
3/8”	F VR38	815700902
1/2”	F VR12	815700912
3/4”	F VR34	815700914
1”	F VR100	815700916
1-1/4”	F VR114	815700918

O-Ring in NBR
BackUp in Teflon®

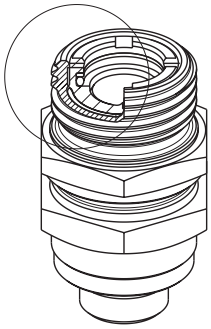

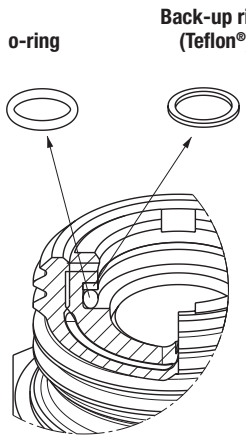

PROTECTIVE CAPS FOR VR SERIES

Protective caps are always recommended to protect the couplings from damage, dirt inclusion, and will increase the product life. This is particularly important in mobile applications where exposure to weather and aggregate materials are common.
Are available two models of protection caps for VR couplings:

- manufactured in plastic with connection lanyard (standard color: red, other colors available upon request)
- manufactured in aluminum screw caps with lanyard (standard color aluminum)

Cap for FEMALE coupling
Red Plastic

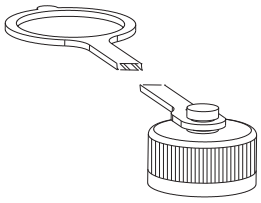

Plug for MALE coupling
Red Plastic

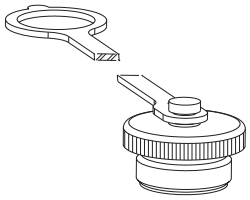

Protective Cap				
Body Size		Part Number		Material/Color
		Cap for Female	Plug for Male	
3/8”	VR38	814900012	814900013	Plastic/Red
1/2”	VR12	814900014	814900015	Plastic/Red

Cap for FEMALE coupling
Aluminum

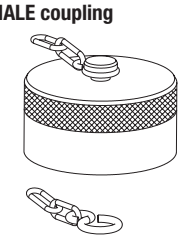

Plug for MALE coupling
Aluminum

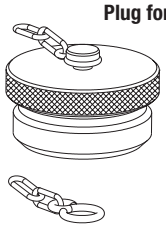

Protective Cap				
Body Size		Part Number		Material/Color
		Cap for Female	Plug for Male	
3/4”	VR34	814906016	814906017	Aluminum/Natural
1”	VR100	814906018	814906019	Aluminum/Natural
1-1/4”	VR114	814906020	814906021	Aluminum/Natural

STUCCHI Quick Couplings Catalog - December 2024 - All right reserved.
Texts, data and illustrations mentioned in this catalogue may be changed by Stucchi at any time, without notice; always refer to the version uploaded on the English version of stucchigroup.com/en website for the latest release. In case of doubt, please contact Stucchi technical service.

Poppet

BIR p. 155

Valving style: Poppet
Interchange: ISO 7241 'A'
Sealing description: Nitrile NBR
Available sizes: From 1/4" to 2"
Operating pressure: Up to 350 bar
Flow rate: Up to 1000 l/min
Material / Treatment:
Carbon steel / Cr3
Connection under pressure:
Allowed (only PC version)

I/IP p. 163

Valving style: Poppet
Interchange: ISO 7241 'A'
Sealing description: Nitrile NBR
Available sizes: From 1/4" to 1"
Operating pressure: Up to 350 bar
Flow rate: Up to 200 l/min
Material / Treatment:
Carbon steel / Cr3

IR p. 171

Valving style: Ball
Interchange: With similar couplings
Sealing description: Nitrile NBR
Available sizes: From 1/4" to 1"
Operating pressure: Up to 300 bar
Flow rate: Up to 150 l/min
Material / Treatment:
Carbon steel / Cr3

IR-V p. 177

Valving style: Poppet
Interchange:
With similar couplings
Sealing description: Nitrile NBR
Available sizes: From 1/4" to 1"
Operating pressure: Up to 300 bar
Flow rate: Up to 200 l/min
Material / Treatment:
Carbon steel / Cr3

IRB p. 183

Valving style: Poppet
Interchange: ISO 7241 'B'
Sealing description: Nitrile NBR
Available sizes: From 1/8" to 1"
Operating pressure: Up to 350 bar
Flow rate: Up to 200 l/min
Material / Treatment:
Carbon steel / Cr3

IRBO p. 189

Valving style: Poppet
Interchange: ISO 7241 'B'
Sealing description: FKM (Viton®)
Available sizes: From 1/8" to 1"
Operating pressure: Up to 200 bar
Flow rate: Up to 200 l/min
Material / Treatment: Brass

IRBX p. 195

Valving style: Poppet
Interchange: ISO 7241 'B'
Sealing description: FKM (Viton®)
Available sizes: From 1/8" to 1"
Operating pressure: Up to 250 bar
Flow rate: Up to 200 l/min
Material / Treatment:
Stainless steel & brass

IRC p. 201

Valving style: Poppet
Interchange: Nordic interface
Sealing description: Nitrile NBR
Available sizes: From 1/4" to 1"
Operating pressure: Up to 450 bar
Flow rate: Up to 378 l/min
Material / Treatment:
Carbon steel / Cr3
Connection under pressure:
Allowed (only PC version)

IRCX p. 207

Valving style: Poppet
Interchange: Nordic interface
Sealing description: FKM (Viton®)
Available sizes: From 1/4" to 1"
Operating pressure: Up to 300 bar
Flow rate: Up to 378 l/min
Material / Treatment:
Stainless steel (AISI 316L)

IFR p. 213

Valving style: Flat face non-spill
Interchange: ISO 5676
Sealing description: Nitrile NBR
Available sizes: 3/8"
Operating pressure: Up to 150 bar
Flow rate: Up to 46 l/min
Material / Treatment:
Carbon steel / Cr3

BIRSERIES

INTERCHANGE > **ISO7241-1 "A"**

Stucchi®

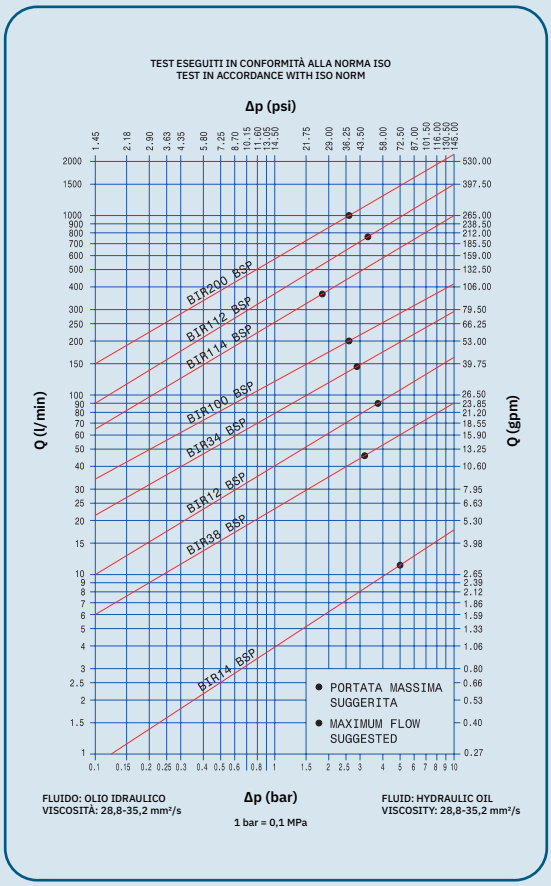

TECHNICAL FEATURES AND OPTIONS

Interchange
ISO 7241 A

Sealing description
Nitrile NBR

Connection system
Single acting sleeve

Available sizes
From 1/4" to 2"

Material /treatment
Carbon steel /Cr3

Available threads
BSP - NPT - BSPT - SAE

Operating pressure
Up to 350 bar

Locking mechanism
Locking ball system

Flow rate
Up to 1000 l/min

Temperature (°C)
-20°C / +100°C

Valving style
Poppet

Connection under pressure
Only PC version
Connection: one side
Disconnection: not allowed

BENEFITS

- Connection under residual pressure is allowed in the male or in the female (PC version). Please notice that the counterpart side should be drained and should use a standard ISO A poppet half.
- The poppet valve with elastomer seal provides maximum sealing of the couplings once disconnected.
- Shape of internal parts is designed to reduce turbulence and pressure drop.
- Compact design.
- Simple to use.

HOW TO USE

- Before to connect, clean the mating surface of the couplings to avoid dirt inclusion in the circuit.
- To connect pull back the sleeve of the female coupling, align the female with the male coupling and push one into the other until both halves are fully connected and release the sleeve.
- To disconnect push back the sleeve of the female coupling, pull out the mating half.

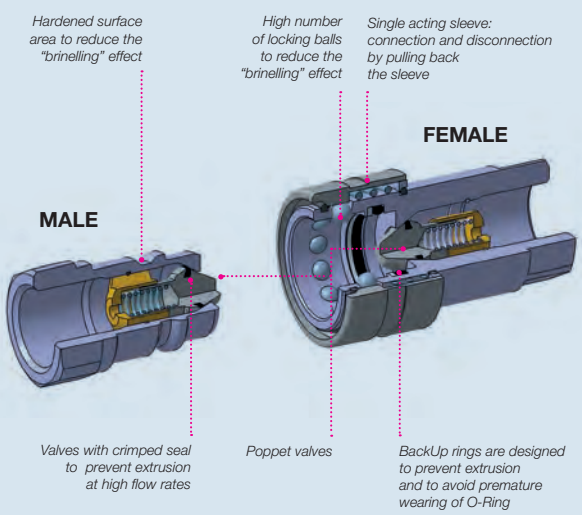

MAIN APPLICATIONS

Stucchi®

PERFORMANCES

Size		Series/Size	Max. flow suggested		Connect force		Disconnect force		Spillage*
in	mm (ISO)		l/min	gpm	N	lbf	N	lbf	ml
1/4	6,3	BIR14	12	3,18	60	13,50	25	5,63	0,70
3/8	10,0	BIR38	46	12,19	90	20,25	30	6,75	1,20
1/2	12,5	BIR12	90	23,85	70	15,75	55	12,38	2,10
3/4	19,0	BIR34	148	39,22	140	31,50	55	12,38	5,20
1	25,0	BIR100	200	53,00	190	42,75	55	12,38	9,00
1-1/4	31,5	BIR114	378	100,17	230	51,75	55	12,38	27,00
1-1/2	38,0	BIR112	750	198,75	250	56,25	70	13,75	49,00
2	51,0	BIR200	1000	265,00	270	60.75	60	13,50	75,00

Size	Series/Size	Max. operating pressure						Burst pressure					
		Coupled		Male		Female		Coupled		Male		Female	
in		MPa	psi	MPa	psi	MPa	psi	MPa	psi	MPa	psi	MPa	psi
1/4	BIR14	35	5075	35	5075	35	5075	126	18270	126	18270	126	18270
3/8	BIR38	30	4350	30	4350	30	4350	100	14500	100	14500	100	14500
1/2	BIR12	25	3625	25	3625	25	3625	100	14500	100	14500	100	14500
3/4	BIR34	25	3625	25	3625	25	3625	100	14500	100	14500	100	14500
1	BIR100	23	3335	23	3335	23	3335	80	11600	80	11600	80	11600
1-1/4	BIR114	23	3335	23	3335	23	3335	80	11600	80	11600	80	11600
1-1/2	BIR112	18	2610	18	2610	18	2610	64	9280	64	9280	64	9280
2	BIR200	13	1885	13	1885	13	1885	40	5800	40	5800	40	5800

* Spillage is an indicative value of the fluid loss during disconnection (according to ISO norm test method).

Different possible configurations:
Thread BSPT and SAE available upon request.
For size 12, different female and male threads configurations available upon request.
PC version, special valve to connect under residual pressure possible either on male or on female side.
PL version, free flow (without valve) on both sides.
TIC version, shielded poppet to avoid flow-checking when used with other connect-under-pressure type couplers.

For complete technical information please contact Stucchi Technical Support.

Temperature range:
Standard seals in NBR (Nitrile): from -20 °C to +100 °C (from -4 °F to +212 °F).
Upon request seals in FKM (VITON®):
from -15°C to +180°C (from +5 °F to +356 °F).
Please read carefully Instructions and warnings for proper selection of the products.

Tests performed:
Qualification tests have been performed with hydraulic oil using couplings with NBR (Nitrile) seals.
The max. operating pressure have been verified for 100.000 impulses according to ISO norm test method.

PC version

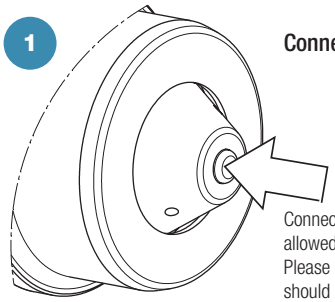

1 Connect the counter part

Connection under residual pressure is allowed in the male or in the female. Please notice that the counterpart side should be drained and should use a standard ISO A poppet half.

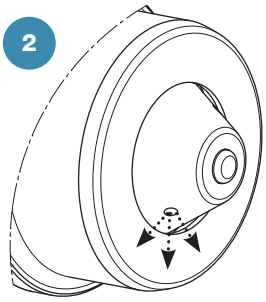

2 The residual pressure released by the small holes during connection

⚠ WARNING

A defect, a wrong choice or an improper use of products, can cause injury to persons, animals and objects.
Connect under pressure products (PC version) are suitable to be connected under residual (static) pressure.
Never connect or disconnect with dynamic pressure (e.g. pump on).
Do not couple-uncouple with flow and pressure in the circuit (except PC version).
Do not couple-uncouple when the temperature inside of the circuit is higher than 80 °C (176 °F).
Check the maximum allowable working pressure of the port in use.
Make sure that the medium used is compatible with seal and material as indicated for each series.
In case of doubt please contact Stucchi Technical Support.
The interchangeability is mentioned under the assumption that the manufacturer of the considered products has not changed any dimension.
It is mandatory to carefully read and closely follow the instructions before selecting or using any Stucchi products.
Always refer to the version uploaded in the Instructions and warning section of stucchigroup.com website for the latest release.
For specific, product-related, instructions, please contact Stucchi technical service.

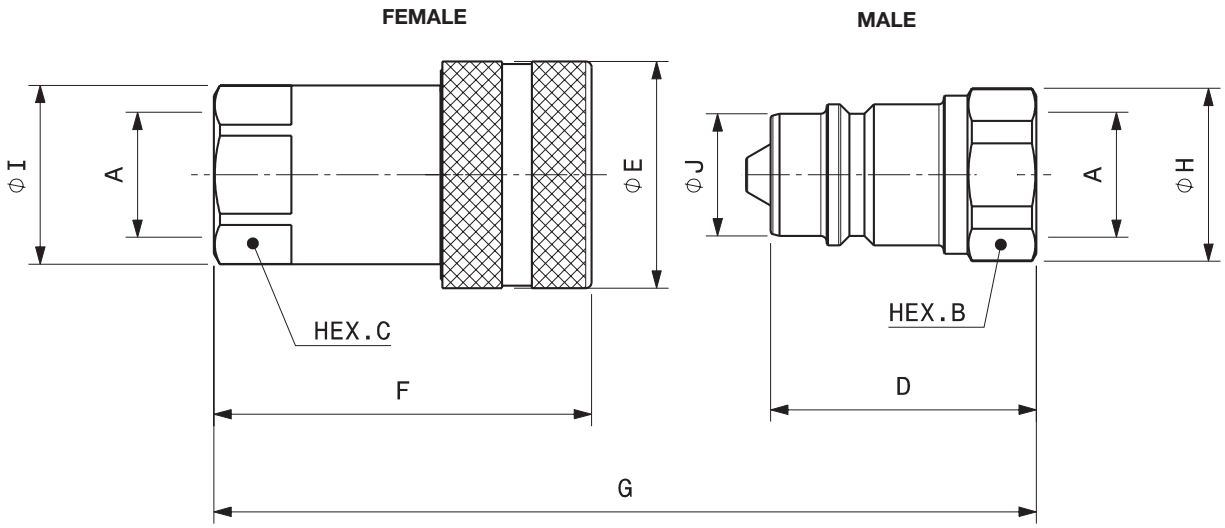

Port description: FEMALE THREAD BSPP (ISO 1179-1)

BODY SIZE	Descriptive Code	Item Code		ISO DN	PORT (A)	Overall Length			Length			Hex			Diameter			Diameter			Weight	
							mm	in		mm	in		mm	in		mm	in		mm	in	kg	lb
1/4"	F BIR14 BSP	Female	800500000	6,3	1/4"	G	64,8	2,55	F	47,1	1,85	C	19,0	0,75	I	22,0	0,87	E	26,0	1,02	0,10	0,21
	M BIR14 BSP	Male	800500001						D	32,0	1,26	B	19,0	0,75	H	20,8	0,82	J	11,8	0,46	0,03	0,07
3/8"	F BIR38 BSP	Female	800500002	10	3/8"	G	76,8	3,02	F	56,1	2,21	C	22,0	0,87	I	24,0	0,94	E	31,0	1,22	0,14	0,32
	M BIR38 BSP	Male	800500003						D	38,0	1,50	B	22,0	0,87	H	24,0	0,94	J	17,3	0,68	0,05	0,11
1/2"	F BIR12 BSP	Female	800500004	12,5	1/2"	G	86,3	3,40	F	63,3	2,49	C	27,0	1,06	I	30,0	1,18	E	38,0	1,50	0,25	0,54
	M BIR12 BSP	Male	800500005						D	44,5	1,75	B	27,0	1,06	H	29,0	1,14	J	20,5	0,81	0,08	0,19
3/4"	F BIR34 BSP	Female	800500006	19	3/4"	G	111,1	4,37	F	82,2	3,24	C	38,0	1,50	I	44,0	1,73	E	48,0	1,89	0,49	1,09
	M BIR34 BSP	Male	800500007						D	55,0	2,17	B	36,0	1,42	H	38,5	1,52	J	29,1	1,15	0,21	0,45
1"	F BIR100 BSP	Female	800500008	25	1"	G	127,3	5,01	F	97,1	3,82	C	45,0	1,77	I	52,0	2,05	E	54,0	2,13	0,76	1,68
	M BIR100 BSP	Male	800500009						D	63,1	2,48	B	41,0	1,61	H	44,8	1,76	J	34,3	1,35	0,28	0,61
1-1/4"	F BIR114 BSP	Female	800500010	31,5	1-1/4"	G	151,2	5,95	F	117,2	4,61	C	50,0	1,97	I	55,5	2,19	E	65,0	2,56	1,25	2,76
	M BIR114 BSP	Male	800500011						D	75,0	2,95	B	55,0	2,17	H	60,0	2,36	J	45,0	1,77	0,59	1,31
1-1/2"	F BIR112 BSP	Female	800500012	38	1-1/2"	G	171,3	6,74	F	135,3	5,33	C	60,0	2,36	I	65,5	2,58	E	80,0	3,15	2,13	4,70
	M BIR112 BSP	Male	800500013						D	85,0	3,35	B	60,0	2,36	H	65,5	2,58	J	55,0	2,17	0,88	1,94
2"	F BIR200 BSP	Female	800500014	51	2"	G	201,2	7,92	F	160,2	6,31	C	75,0	2,95	I	83,7	3,30	E	100,0	3,94	4,13	9,10
	M BIR200 BSP	Male	800500015						D	100,0	3,94	B	75,0	2,95	H	82,5	3,25	J	65,0	2,56	1,44	3,17

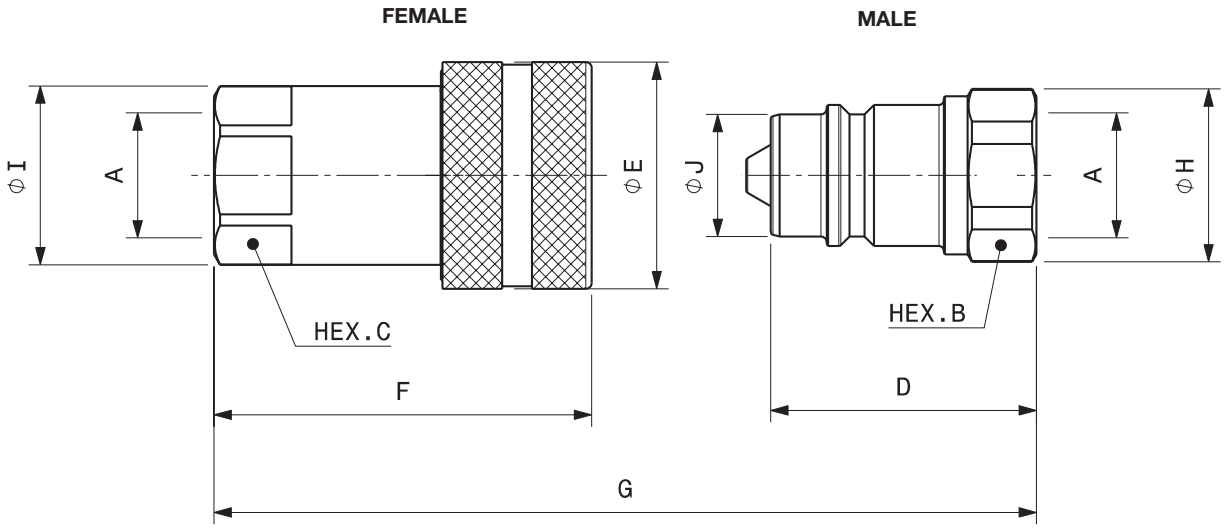

PC version poppet sealing system connectable under pressure

BODY SIZE	Descriptive Code	Item Code		ISO DN	PORT (A)	Overall Length			Length			Hex			Diameter			Diameter			Weight	
							mm	in		mm	in		mm	in		mm	in		mm	inc	kg	lb
1/2"	F BIR12PC BSP	Female	805600002	12,5	1/2"	G	86,3	3,40	F	63,3	2,49	C	27,0	1,06	I	30,0	1,18	E	38,0	1,50	0,25	0,54
	M BIR12PC BSP	Male	805600003						D	44,5	1,75	B	27,0	1,06	H	29,0	1,14	J	20,5	0,81	0,08	0,19

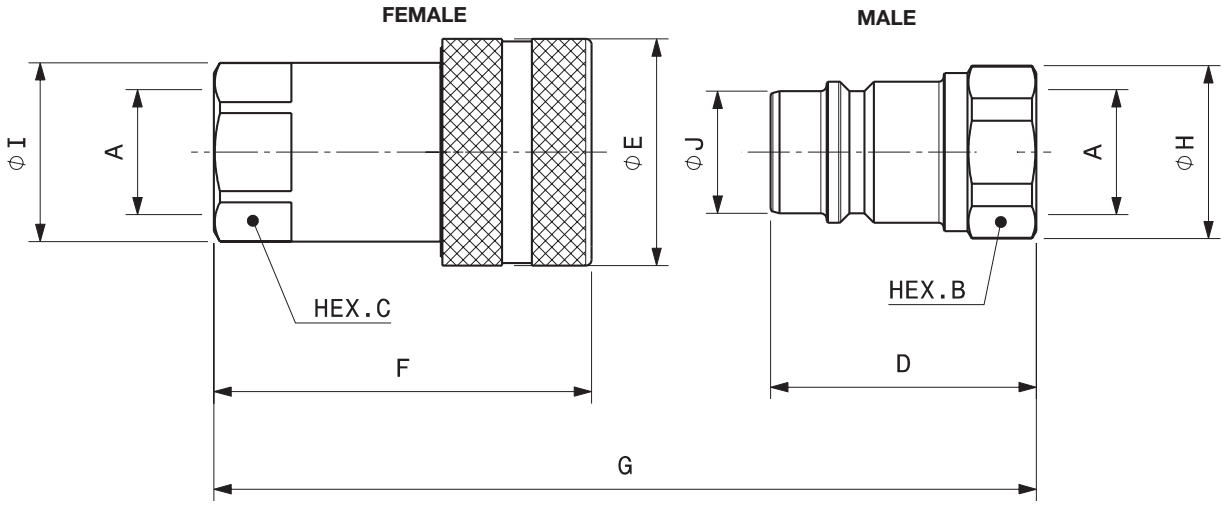

Port description: FEMALE THREAD BSPP (ISO 1179-1)

PL version full flow (without valve)

BODY SIZE	Descriptive Code	Item Code		ISO DN	PORT (A)	Overall Length			Length			Hex			Diameter			Diameter			Weight	
							mm	in		mm	in		mm	in		mm	in		mm	in	kg	lb
1/4"	F BIR14PL BSP	Female	800500018	6,3	1/4"	G	64,8	2,55	F	47,1	1,85	C	19,0	0,75	I	22,0	0,87	E	26,0	1,02	0,10	0,21
	M BIR14PL BSP	Male	800500019						D	32,0	1,26	B	19,0	0,75	H	20,8	0,82	J	11,8	0,46	0,03	0,07
3/8"	F BIR38PL BSP	Female	800500022	10	3/8"	G	76,8	3,02	F	56,1	2,21	C	22,0	0,87	I	24,0	0,94	E	31,0	1,22	0,14	0,32
	M BIR38PL BSP	Male	800500023						D	38,0	1,50	B	22,0	0,87	H	24,0	0,94	J	17,3	0,68	0,05	0,11
1/2"	F BIR12PL BSP	Female	800500020	12,5	1/2"	G	86,3	3,40	F	63,3	2,49	C	27,0	1,06	I	30,0	1,18	E	38,0	1,50	0,25	0,54
	M BIR12PL BSP	Male	800500021						D	44,5	1,75	B	27,0	1,06	H	29,0	1,14	J	20,5	0,81	0,08	0,19
3/4"	F BIR34PL BSP	Female	800500016	19	3/4"	G	111,1	4,37	F	82,2	3,24	C	38,0	1,50	I	44,0	1,73	E	48,0	1,89	0,49	1,09
	M BIR34 PL BSP	Male	800500017						D	55,0	2,17	B	36,0	1,42	H	38,5	1,52	J	29,1	1,15	0,21	0,45
1"	F BIR100PL BSP	Female	800500024	25	1"	G	127,3	5,01	F	97,1	3,82	C	45,0	1,77	I	52,0	2,05	E	54,0	2,13	0,76	1,68
	M BIR100PL BSP	Male	800500025						D	63,1	2,48	B	41,0	1,61	H	44,8	1,76	J	34,3	1,35	0,28	0,61

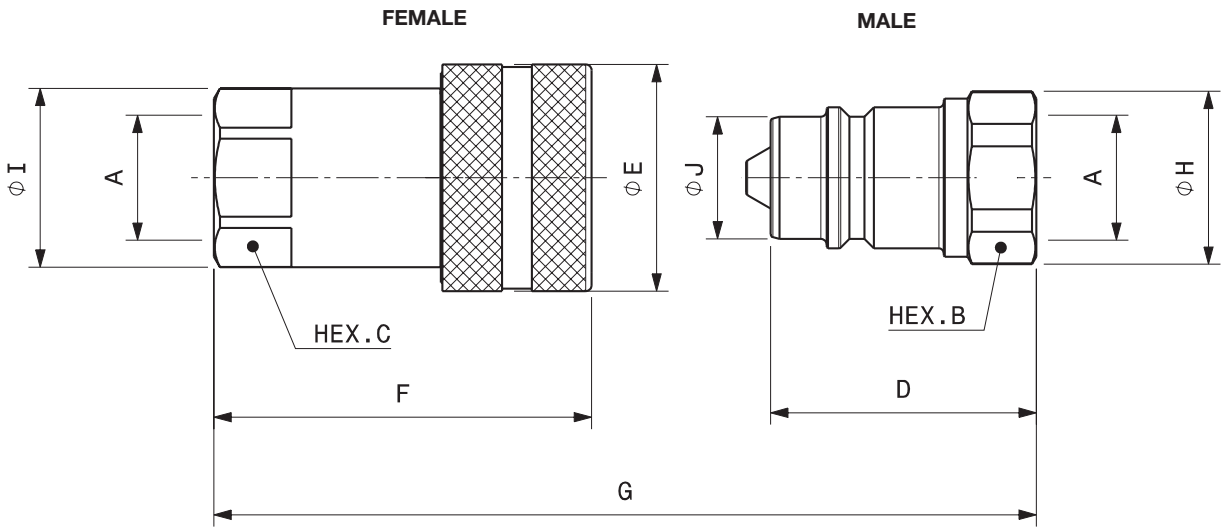

Port description: FEMALE THREAD NPT (ANSI B.1.20.1)

BODY SIZE	Descriptive Code	Item Code		ISO DN	PORT (A)	Overall Length			Length			Hex			Diameter			Diameter			Weight	
							mm	in		mm	in		mm	in		mm	in		mm	in	kg	lb
1/4"	F BIR14 NPT	Female	800501000	6,3	1/4"	G	64,8	2,55	F	47,1	1,85	C	19,0	0,75	I	22,0	0,87	E	26,0	1,02	0,09	0,21
	M BIR14 NPT	Male	800501001						D	32,0	1,26	B	19,0	0,75	H	20,8	0,82	J	11,8	0,46	0,03	0,07
3/8"	F BIR38 NPT	Female	800501002	10	3/8"	G	76,8	3,02	F	56,1	2,21	C	22,0	0,87	I	24,0	0,94	E	31,0	1,22	0,15	0,32
	M BIR38 NPT	Male	800501003						D	38,0	1,50	B	22,0	0,87	H	24,0	0,94	J	17,3	0,68	0,05	0,12
1/2"	F BIR12 NPT	Female	800501004	12,5	1/2"	G	86,3	3,40	F	63,3	2,49	C	27,0	1,06	I	30,0	1,18	E	38,0	1,50	0,25	0,54
	M BIR12 NPT	Male	800501005						D	44,5	1,75	B	27,0	1,06	H	29,0	1,14	J	20,5	0,81	0,08	0,19
3/4"	F BIR34 NPT	Female	800501006	19	3/4"	G	111,1	4,37	F	82,2	3,24	C	38,0	1,50	I	44,0	1,73	E	48,0	1,89	0,50	1,11
	M BIR34 NPT	Male	800501007						D	55,0	2,17	B	36,0	1,42	H	38,5	1,52	J	29,1	1,15	0,21	0,46
1"	F BIR100 NPT	Female	800501008	25	1"	G	127,3	5,01	F	97,1	3,82	C	45,0	1,77	I	52,0	2,05	E	54,0	2,13	0,77	1,70
	M BIR100 NPT	Male	800501009						D	63,1	2,48	B	41,0	1,61	H	44,8	1,76	J	34,3	1,35	0,28	0,63
1-1/4"	F BIR114 NPT	Female	800501010	31,5	1-1/4"	G	151,2	5,95	F	117,2	4,61	C	50,0	1,97	I	55,5	2,19	E	65,0	2,56	1,24	2,74
	M BIR114 NPT	Male	800501011						D	75,0	2,95	B	55,0	2,17	H	60,0	2,36	J	45,0	1,77	0,62	1,36
1-1/2"	F BIR112 NPT	Female	800501012	38	1-1/2"	G	171,3	6,74	F	135,3	5,33	C	60,0	2,36	I	65,5	2,58	E	80,0	3,15	2,13	4,70
	M BIR112 NPT	Male	800501013						D	85,0	3,35	B	60,0	2,36	H	65,5	2,58	J	55,0	2,17	0,88	1,94
2"	F BIR200 NPT	Female	800501014	51	2"	G	201,2	7,92	F	160,2	6,31	C	75,0	2,95	I	83,7	3,30	E	100,0	3,94	4,13	9,10
	M BIR200 NPT	Male	800501015						D	100,0	3,94	B	75,0	2,95	H	82,5	3,25	J	65,0	2,56	1,44	3,17

PC version poppet sealing system connectable under pressure

BODY SIZE	Descriptive Code	Item Code		ISO DN	PORT (A)	Overall Length			Length			Hex			Diameter			Diameter			Weight	
							mm	in		mm	in		mm	in		mm	in		mm	in	kg	lb
1/2"	F BIR12PC NPT	Female	805601000	12,5	1/2"	G	86,3	3,40	F	63,3	2,49	C	27,0	1,06	I	30,0	1,18	E	38,0	1,50	0,25	0,54
	M BIR12PC NPT	Male	805601001						D	44,5	1,75	B	27,0	1,06	H	29,0	1,14	J	20,5	0,81	0,08	0,19
1"	F BIR100PC NPT	Female	805601004	25	1"	G	127,3	5,01	F	97,1	3,82	C	45,0	1,77	I	52,0	2,05	E	54,0	2,13	0,81	1,79
	M BIR100PC NPT	Male	805601005						D	63,1	2,48	B	41,0	1,61	H	44,8	1,76	J	34,3	1,35	0,30	0,66

TIC version Shielded poppet to eliminate flow-checking when used with connect-under-pressure competitor couplers

BODY SIZE	Descriptive Code	Item Code		ISO DN	PORT (A)	Overall Length			Length			Hex			Diameter			Diameter			Weight	
							mm	in		mm	in		mm	in		mm	in		mm	in	kg	lb
1/2"	M BIR12TIC NPT	Male	800501017	12,5	1/2"	G	83,3	3,30	D	44,5	1,75	B	27,0	1,06	H	29,0	1,14	J	20,5	0,81	0,08	0,19

SPARE KIT SEAL FOR FEMALE

Repair kit / OR (+BK)		
Body Size	Description	Part Number
1/4”	F BIR14	815700170
3/8”	F BIR38	815700172
1/2”	F BIR12	815700174
3/4”	F BIR34	815700176
1”	F BIR100	815700178
1-1/4”	F BIR114	815700180
1-1/2”	F BIR112	815700182
2”	F BIR200	815700184

O-Ring in Nitrile
BackUp in Teflon®

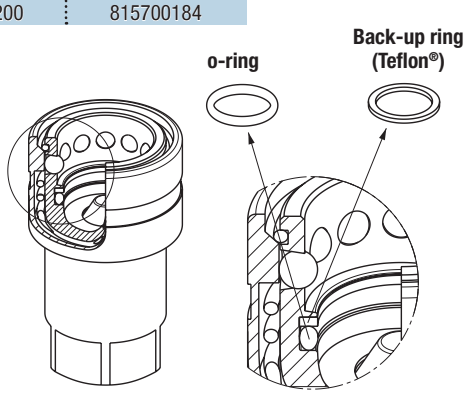

PARKING STATION FOR MALE

Parking station only (male coupling not included)		
Body Size	Description	Part Number
1/2”	PARK STATION FOR MALE BIR12	815515003
1/2”	PARK STATION PLASTIC FOR MALE BIR12	815515005

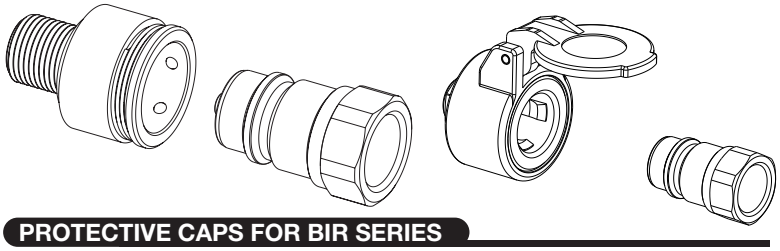

PROTECTIVE CAPS FOR BIR SERIES

Protective caps are always recommended to protect the couplings from damage, dirt inclusion, and will increase the product life. This is particularly important in agriculture applications where exposure to weather and aggregate materials are common.
The protective caps for BIR series are manufactured in with connection lanyard (standard color red, other colors available upon request).

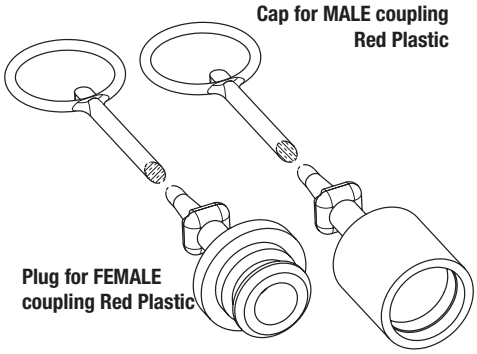

Protective Cap				
Body Size/Description		Part Number		Material/Color
		Plug for Female	Cap for Male	
1/4”	BIR14	815000012	815000013	Plastic/Red
3/8”	BIR38	815000014	815000015	Plastic/Red
1/2”	BIR12	815000004	815000005	Plastic/Red
3/4”	BIR34	815000016	815000017	Plastic/Red
1”	BIR100	815000018	815000019	Plastic/Red

STUCCHI Quick Couplings Catalog - December 2024 - All right reserved.
Texts, data and illustrations mentioned in this catalogue may be changed by Stucchi at any time, without notice; always refer to the version uploaded on the English version of stucchigroup.com/en website for the latest release. In case of doubt, please contact Stucchi technical service.

I-IPSERIES

INTERCHANGE > **ISO 7241 A**

Stucchi®

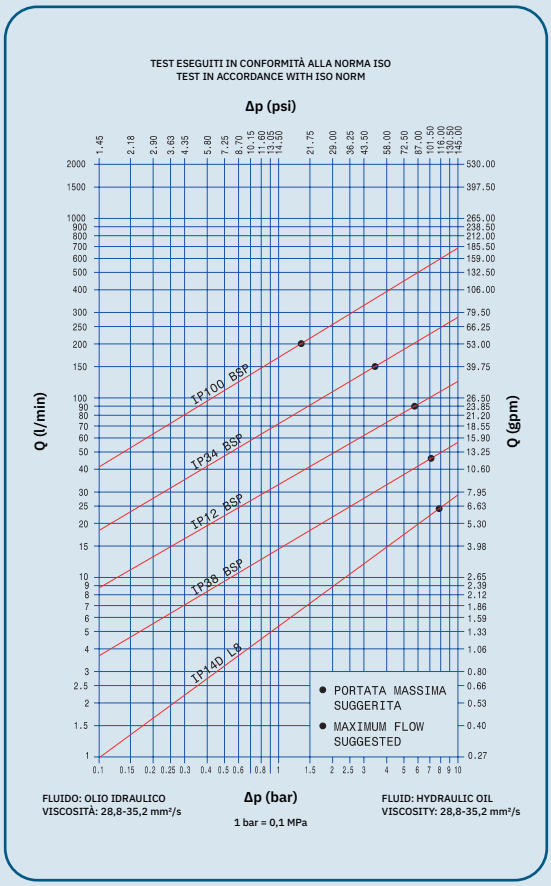

TECHNICAL FEATURES AND OPTIONS

Interchange
ISO 7241 A

Sealing description
Nitrile NBR

Connection system
Push - pull

Available sizes
From 1/4" to 1"

Material /treatment
Carbon steel /Cr3

Available threads
BSP - NPT - METRIC

Operating pressure
Up to 350 bar

Locking mechanism
Locking Ball System

Flow rate
Up to 200 l/min

Temperature (°C)
-20°C / +100°C

Valving style
Poppet

Connection under pressure
Connection: not allowed
Disconnection: not allowed

BENEFITS

- Breakaway function to avoid damages of the hydraulic connections in case of strong axial force during unintended disconnection.
- The poppet valve with elastomer seal provides maximum sealing of the couplings when disconnected.
- Shape of internal parts is designed to reduce turbulence and pressure drop.
- The modular design allows for broad range of port configurations.
- Compact design.
- Simple to use.

HOW TO USE

- For the breakaway function, the female coupling must be mounted in a panel, locking the sleeve using seeger/ snap rings.
- Provide the IP female with a flexible hose, in order to permit the movements of the internal body during connection and disconnection of the couplings.
- Before to connect, clean the mating surface of the couplings to avoid dirt inclusion in the circuit.
- To connect push the male coupling into the female coupling.
- To disconnect pull back the male coupling.

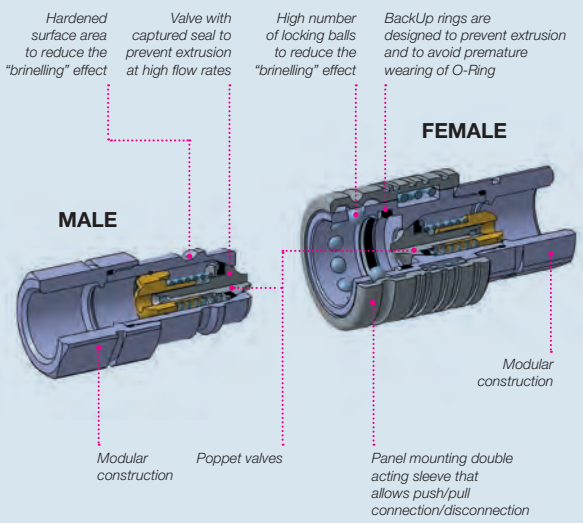

MAIN APPLICATIONS

PERFORMANCES

Size		Series/Size	Max. flow suggested		Connect force		Disconnect force		Spillage*
in	mm (ISO)		l/min	gpm	N	lbf	N	lbf	ml
1/4	6,3	F IP14D–M I14D **	24	6,36	27	6,08	17	3,83	0,30
3/8	10,0	F IP38-M I38	46	12,19	75	16,88	30	6,75	1,20
1/2	12,5	F IP12–M I12GS	90	23,85	90	20,25	80	18,00	1,80
3/4	19,0	F IP34-M I34	148	39,22	130	29,25	70	15,75	5,20
1	25,0	F IP100-M I100	200	53,00	300	67,50	70	15,75	13,00

Size	Series/Size	Max. operating pressure						Burst pressure					
		Coupled		Male		Female		Coupled		Male		Female	
in		MPa	psi	MPa	psi	MPa	psi	MPa	psi	MPa	psi	MPa	psi
1/4	F IP14D–M I14D **	35	5075	35	5075	35	5075	110	15950	126	18270	126	18270
3/8	F IP38-M I38	30	4350	30	4350	30	4350	100	14500	100	14500	100	14500
1/2	F IP12–M I12GS	25	3625	25	3625	25	3625	90	13050	100	14500	100	14500
3/4	F IP34-M I34	25	3625	25	3625	25	3625	90	13050	100	14500	100	14500
1	F IP100-M I100	25	3625	25	3625	25	3625	80	11600	100	14500	100	14500

* Spillage is an indicative value of the fluid loss during disconnection (according to ISO norm test method).
** I-IP 14 type “D” couplings are not ISO7241-1/A interchangeable.

Different possible configurations:
Different threads available upon request.

Temperature range:
Seals in NBR (Nitrile): from -20 °C to +100 °C (from -4 °F to +212 °F).
Please read carefully Instructions and warnings for proper selection of the products.

Tests:
Qualification tests have been performed with hydraulic oil using couplings with NBR (Nitrile) seals.
The max. operating pressure have been verified fo 200.000 impulses according to ISO norm test method.

WARNING

A defect, a wrong choice or an improper use of products, can cause injury to persons, animals and objects.
Never connect or disconnect with dynamic pressure (e.g. pump on).
Do not couple-uncouple with flow and/or pressure in the circuit.
Do not couple-uncouple when the temperature inside of the circuit is higher than 80 °C (176 °F).
Check the maximum allowable working pressure of the port in use.
Make sure that the medium used is compatible with seal and material as indicated for each series.
In case of doubt please contact Stucchi Technical Support.
The interchangeability is mentioned under the assumption that the manufacturer of the considered products has not changed any dimension.
It is mandatory to carefully read and closely follow the instructions before selecting or using any Stucchi products.
Always refer to the version uploaded in the Instructions and warning section of stucchigroup.com website for the latest release.
For specific, product-related, instructions, please contact Stucchi technical service.

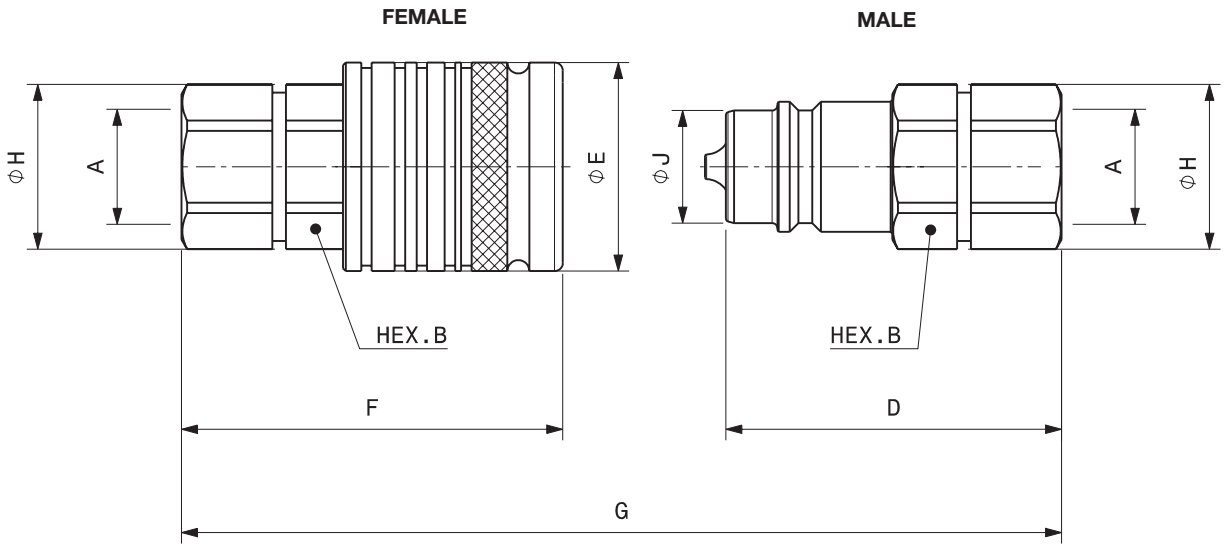

Port description: FEMALE THREAD BSPP (ISO 1179-1)

BODY SIZE	Descriptive Code	Item Code		ISO DN	BG	PORT (A)	Overall Length	mm	in	Length	mm	in	Hex	mm	in	Overall Diameter	mm	in	Body Diameter	mm	in	Weight	kg	lb
3/8"	F IP38 1/4 BSP	Female	809400008	10	2	1/4"	G	64,8	2,55	F	67,5	2,66	B	22,0	0,87	H	24,0	0,94	E	32,0	1,26	0,22	0,49
	M I38 1/4 BSP	Male	809400009							D	49,3	1,94							J	17,3	0,68	0,09	0,20
3/8"	F IP38 3/8 BSP	Female	809400010	10	2	3/8"	G	76,8	3,02	F	70,5	2,78	B	22,0	0,87	H	24,0	0,94	E	32,0	1,26	0,22	0,49
	M I38 3/8 BSP	Male	809400011							D	52,3	2,06							J	17,3	0,68	0,09	0,20
1/2"	F IP12 3/8 BSP	Female	809400004	12,5	3	3/8"	G	86,3	3,40	F	65,6	2,58	B	27,0	1,06	H	30,0	1,18	E	38,0	1,50	0,26	0,57
	M I12GS 3/8 BSP	Male	809400005							D	57,3	2,26							J	20,5	0,81	0,14	0,31
1/2"	F IP12 1/2 BSP	Female	809400000	12,5	3	1/2"	G	111,1	4,37	F	69,4	2,73	B	27,0	1,06	H	30,0	1,18	E	38,0	1,50	0,26	0,56
	M I12GS 1/2 BSP	Male	809400001							D	61,1	2,41							J	20,5	0,81	0,14	0,31
3/4"	F IP34 3/4 BSP	Female	809400014	19	4	3/4"	G	127,3	5,01	F	91,5	3,60	B	36,0	1,42	H	40,0	1,57	E	46,0	1,81	0,62	1,36
	M I34 3/4 BSP	Male	809400015							D	64,4	2,54							J	29,0	1,14	0,28	0,62
1"	F IP100 3/4 BSP	Female	809400016	25	6	3/4"	G	151,2	5,95	F	103,5	4,07	B	41,0	1,61	H	45,0	1,77	E	54,0	2,13	0,90	1,98
	M I100 3/4 BSP	Male	809400017							D	69,5	2,74							J	34,3	1,35	0,40	0,88
1"	F IP100 1" BSP	Female	809400018	25	6	1"	G	171,3	6,74	F	109,0	4,29	B	41,0	1,61	H	45,0	1,77	E	54,0	2,13	0,89	1,96
	M I100 1" BSP	Male	809400019							D	75,0	2,95							J	34,3	1,35	0,39	0,86

Port description: FEMALE THREAD NPT (ANSI B.1.20.1)

BODY SIZE	Descriptive Code	Item Code		ISO DN	BG	PORT (A)	Overall Length	mm	in	Length	mm	in	Hex	mm	in	Overall Diameter	mm	in	Body Diameter	mm	in	Weight	kg	lb
1/2"	F IP12 1/2 NPT	Female	809401000	12,5	3	1/2"	G	111,1	4,37	F	68,1	2,68	B	27,0	1,06	H	30,0	1,18	E	38,0	1,50	0,25	0,11
	M I12GS 1/2 NPT	Male	809401001							D	59,8	2,35							J	20,5	0,81	0,14	0,06

Panel mounting on the sleeve: please conctact your Stucchi Technical support to get detailed dimensions.

I-IPSERIES

Stucchi®

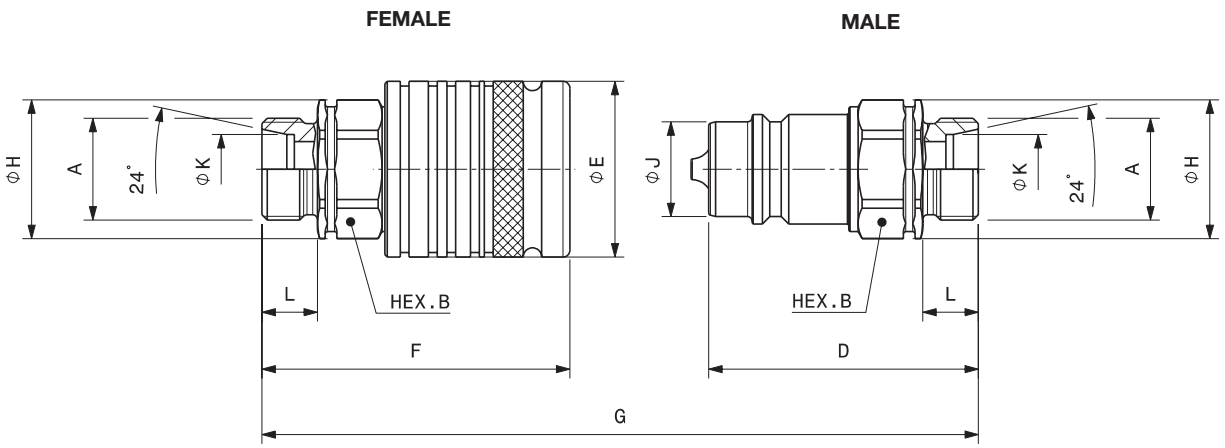

Port description: MALE THREAD METRIC L SERIES – 24°CONE (ISO 8434-1 & DIN 2353)

BODY SIZE	Descriptive Code	Item Code		ISO DN	BG	PORT (A)	Overall Length			Length			Hex			Overall Diameter			Diameter			Length			Body Diameter			Weight	
								mm	in		mm	in		mm	in		mm	in		mm	in		mm	in		mm	in	kg	lb
1/4"	F IP14D L8	Female	809408010	6,3	1	M14 X 1,5	G	90,5	3,56	F	62,9	2,48	B	19,0	0,75	H	21,0	0,83	K	8,2	0,32	L	10,0	0,39	E	26,0	1,02	0,13	0,29
	M I14D L8	Male	809408011							D	45,0	1,77													J	11,9	0,47	0,05	0,10
3/8"	F IP38 L8	Female	809408012	10	2	M14X 1,5	G	93,2	3,67	F	64,5	2,54	B	22,0	0,87	H	24,0	0,94	K	8,2	0,32	L	10,0	0,39	E	32,0	1,26	0,20	0,44
	M I38 L8	Male	809408013							D	46,3	1,82													J	17,3	0,68	0,07	0,15
3/8"	F IP38 L10	Female	809408014	10	2	M16 X 1.5	G	95,2	3,75	F	65,5	2,58	B	22,0	0,87	H	24,0	0,94	K	10,2	0,40	L	11,0	0,43	E	32,0	1,26	0,20	0,44
	M I38 L10	Male	809408015							D	47,3	1,86													J	17,3	0,68	0,07	0,15
1/2"	F IP12 L8	Female	809408002	12,5	3	M14 X 1,5	G	101,0	3,98	F	65,6	2,58	B	27,0	1,06	H	30,0	1,18	K	8,2	0,32	L	10,0	0,39	E	38,0	1,50	0,24	0,52
	M I12GS L8	Male	809408003							D	57,3	2,26													J	20,5	0,81	0,12	0,26
1/2"	F IP12 L10	Female	809408006	12,5	3	M16 X 1.5	G	101,0	3,98	F	65,6	2,58	B	27,0	1,06	H	30,0	1,18	K	10,2	0,40	L	11,0	0,43	E	38,0	1,50	0,23	0,51
	M I12GS L10	Male	809408007							D	57,3	2,26													J	20,5	0,81	0,12	0,26
1/2"	F IP12 L12	Female	809408000	12,5	3	M18x1,5	G	101,0	3,98	F	65,6	2,58	B	27,0	1,06	H	30,0	1,18	K	12,2	0,48	L	11,0	0,43	E	38,0	1,50	0,23	0,51
	M I12GS L12	Male	809408001							D	57,3	2,26													J	20,5	0,81	0,12	0,26
1/2"	F IP12 L15	Female	809408004	12,5	3	M22x1,5	G	103,0	4,06	F	66,6	2,62	B	27,0	1,06	H	30,0	1,18	K	15,2	0,60	L	12,0	0,47	E	38,0	1,50	0,24	0,53
	M I12GS L15	Male	809408005							D	58,3	2,30													J	20,5	0,81	0,12	0,27
1/2"	F IP12 L18	Female	809408008	12,5	3	M26x1,5	G	103,0	4,06	F	66,6	2,62	B	27,0	1,06	H	30,0	1,18	K	18,2	0,72	L	12,0	0,47	E	38,0	1,50	0,24	0,54
	M I12GS L18	Male	809408009							D	58,3	2,30													J	20,5	0,81	0,13	0,28
3/4"	F IP34 L18	Female	809408026	19	4	M26x1,5	G	120,5	4,74	F	87,1	3,43	B	36,0	1,42	H	40,0	1,57	K	18,2	0,72	L	12,0	0,47	E	46,0	1,81	0,57	1,26
	M I34 L18	Male	809408027							D	60,0	2,36													J	29,0	1,14	0,24	0,52
3/4"	F IP34 L22	Female	809408028	19	4	M30x2	G	122,4	4,82	F	88,0	3,46	B	36,0	1,42	H	40,0	1,57	K	22,0	0,87	L	14,0	0,55	E	46,0	1,81	0,57	1,25
	M I34 L22	Male	809408029							D	61,0	2,40													J	29,0	1,14	0,23	0,51
1"	F IP100 L15	Female	809408030	25	6	M22x1,5	G	138,6	5,46	F	103,0	4,06	B	41,0	1,61	H	45,0	1,77	K	15,2	0,60	L	12,0	0,47	E	54,0	2,13	0,85	1,87
	M I100 L15	Male	809408031							D	69,0	2,72													J	34,3	1,35	0,35	0,76
1"	F IP100 L18	Female	809408032	25	6	M26x1,5	G	138,6	5,46	F	103,0	4,06	B	41,0	1,61	H	45,0	1,77	K	18,2	0,72	L	12,0	0,47	E	54,0	2,13	0,85	1,87
	M I100 L18	Male	809408033							D	69,0	2,72													J	34,3	1,35	0,35	0,76
1"	F IP100 L22	Female	809408034	25	6	M30x2	G	142,6	5,61	F	105,0	4,13	B	41,0	1,61	H	45,0	1,77	K	22,2	0,87	L	14,0	0,55	E	54,0	2,13	0,85	1,88
	M I100 L22	Male	809408035							D	71,0	2,80													J	34,3	1,35	0,35	0,77
1"	F IP100 L28	Female	809408036	25	6	M36x2	G	142,6	5,61	F	105,0	4,13	B	41,0	1,61	H	45,0	1,77	K	28,2	1,11	L	14,0	0,55	E	54,0	2,13	0,85	1,88
	M I100 L28	Male	809408037							D	71,0	2,80													J	34,3	1,35	0,35	0,77

Port description: MALE THREAD METRIC S SERIES – 24°CONE (ISO 8434-1 & DIN 2353)

BODY SIZE	Descriptive Code	Item Code		ISO DN	BG	PORT (A)	Overall Length			Length			Hex			Overall Diameter			Diameter			Length			Body Diameter			Weight	
								mm	in		mm	in		mm	in		mm	in		mm	in		mm	in		mm	in	kg	lb
1/2"	F IP12 S10	Female	809409000	12,5	3	M18x1,5	G	103,0	4,06	F	66,6	2,62	B	27,0	1,06	H	30,0	1,18	K	10,2	0,40	L	12,0	0,47	E	38,0	1,50	0,24	0,53
	M I12GS S10	Male	809409001							D	58,3	2,30													J	20,5	0,81	0,12	0,27
1/2"	F IP12 S12	Female	809409002	12,5	3	M20x1,5	G	103,0	4,06	F	66,6	2,62	B	27,0	1,06	H	30,0	1,18	K	12,2	0,48	L	12,0	0,47	E	38,0	1,50	0,24	0,53
	M I12GS S12	Male	809409003							D	58,3	2,30													J	20,5	0,81	0,13	0,28
1/2"	F IP12 S14	Female	809409004	12,5	3	M22x1,5	G	107,0	4,21	F	68,6	2,70	B	27,0	1,06	H	30,0	1,18	K	14,2	0,56	L	14,0	0,55	E	38,0	1,50	0,25	0,54
	M I12GS S14	Male	809409005							D	60,3	2,37													J	20,5	0,81	0,13	0,29

Panel mounting on the sleeve: please conctact your Stucchi Technical support to get detailed dimensions.

I-IPSERIES

Stucchi®

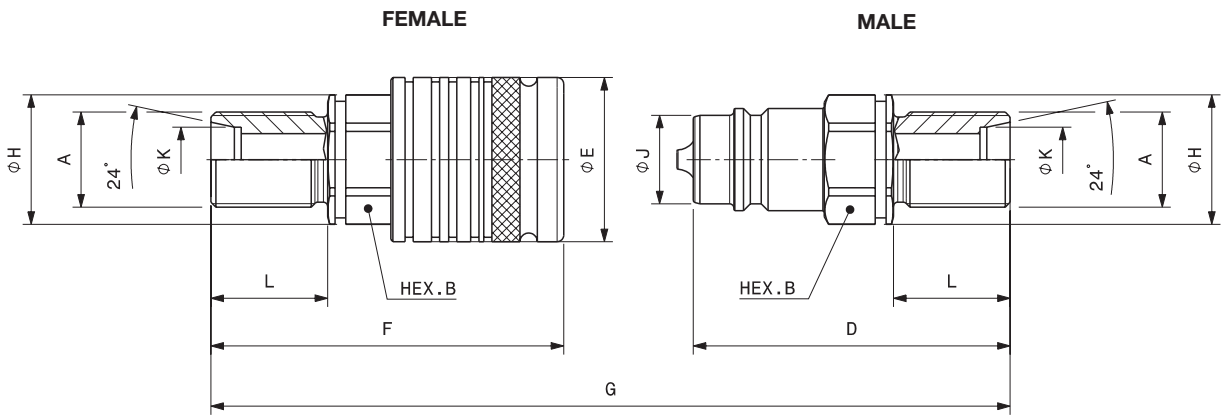

Port description: MALE THREAD METRIC L SCHOTT – BULKHEAD SERIES – 24°CONE (ISO 8434-1 & DIN 2353)

BODY SIZE	Descriptive Code	Item Code		ISO DN	BG	PORT (A)	Overall Length			Length			Hex			Overall Diameter			Diameter			Length			Body Diameter			Weight	
								mm	in		mm	in		mm	in		mm	in		mm	in		mm	in		mm	in	kg	lb
1/4"	F IP14D L8 SCHOTT	Female	809410010	6,3	1	M14 X 1,5	G	120,5	4,74	F	77,9	3,07	B	19,0	0,75	H	21,0	0,83	K	8,2	0,32	L	25,0	0,98	E	26,0	1,02	0,14	0,31
	M I14D L8 SCHOTT	Male	809410011							D	60,0	2,36													J	11,9	0,47	0,06	0,13
3/8"	F IP38 L8 SCHOTT	Female	809410012	10	2	M14X 1,5	G	123,2	4,85	F	79,5	3,13	B	22,0	0,87	H	24,0	0,94	K	8,2	0,32	L	25,0	0,98	E	32,0	1,26	0,21	0,46
	M I38 L8 SCHOTT	Male	809410013							D	61,3	2,41													J	17,3	0,68	0,08	0,18
3/8"	F IP38 L10 SCHOTT	Female	809410014	10	2	M16 X 1.5	G	125,2	4,93	F	80,5	3,17	B	22,0	0,87	H	24,0	0,94	K	10,2	0,40	L	26,0	1,02	E	32,0	1,26	0,21	0,47
	M I38 L10 SCHOTT	Male	809410015							D	62,3	2,45													J	17,3	0,68	0,08	0,18
1/2"	F IP12 L8 SCHOTT	Female	809410002	12,5	3	M14 X 1,5	G	133,0	5,24	F	81,6	3,21	B	27,0	1,06	H	30,0	1,18	K	8,2	0,32	L	26,0	1,02	E	38,0	1,50	0,25	0,55
	M I12GS L8 SCHOTT	Male	809410003							D	73,3	2,89													J	20,5	0,81	0,13	0,29
1/2"	F IP12 L10 SCHOTT	Female	809410006	12,5	3	M16 X 1.5	G	131,0	5,16	F	80,6	3,17	B	27,0	1,06	H	30,0	1,18	K	10,2	0,40	L	26,0	1,02	E	38,0	1,50	0,25	0,54
	M I12GS L10 SCHOTT	Male	809410007							D	72,3	2,85													J	20,5	0,81	0,13	0,29
1/2"	F IP12 L12 SCHOTT 30	Female	809410000	12,5	3	M18 X 1,5	G	139,0	5,47	F	84,6	3,33	B	27,0	1,06	H	30,0	1,18	K	12,2	0,48	L	30,0	1,18	E	38,0	1,50	0,25	0,56
	M I12GS L12 SCHOTT 30	Male	809410001							D	76,3	3,00													J	20,5	0,81	0,14	0,31
1/2"	F IP12 L15 SCHOTT	Female	809410004	12,5	3	M22x1,5	G	133,0	5,24	F	81,6	3,21	B	27,0	1,06	H	30,0	1,18	K	15,2	0,60	L	27,0	1,06	E	38,0	1,50	0,27	0,59
	M I12GS L15 SCHOTT	Male	809410005							D	73,3	2,89													J	20,5	0,81	0,15	0,34
1/2"	F IP12 L18 SCHOTT	Female	809410008	12,5	3	M26x1,5	G	133,0	5,24	F	81,6	3,21	B	27,0	1,06	H	30,0	1,18	K	18,2	0,72	L	27,0	1,06	E	38,0	1,50	0,28	0,62
	M I12GS L18 SCHOTT	Male	809410009							D	73,3	2,89													J	20,5	0,81	0,16	0,36
3/4"	F IP34 L15 SCHOTT	Female	809410024	19	4	M22x1,5	G	148,5	5,85	F	101,1	3,98	B	36,0	1,42	H	40,0	1,57	K	15,2	0,60	L	27,0	1,06	E	46,0	1,81	0,59	1,29
	M I34 L15 SCHOTT	Male	809410025							D	74,0	2,91													J	29,0	1,14	0,25	0,55
3/4"	F IP34 L22 SCHOTT 36	Female	809410028	19	4	M30x2	G	166,5	6,56	F	110,1	4,33	B	36,0	1,42	H	40,0	1,57	K	22,0	0,87	L	36,0	1,42	E	46,0	1,81	0,63	1,38
	M I34 L22 SCHOTT 36	Male	809410029							D	83,0	3,27													J	29,0	1,14	0,29	0,64

Locknuts available upon request.

Port description: MALE THREAD METRIC S SCHOTT – BULKHEAD SERIES – 24°CONE (ISO 8434-1 & DIN 2353)

BODY SIZE	Descriptive Code	Item Code		ISO DN	BG	PORT (A)	Overall Length			Length			Hex			Overall Diameter			Diameter			Length			Body Diameter			Weight	
								mm	in		mm	in		mm	in		mm	in		mm	in		mm	in		mm	in	kg	lb
1/2"	F IP12 S10 SCHOTT	Female	809411000	12,5	3	M18 X 1,5	G	133,0	5,24	F	81,6	3,21	B	27,0	1,06	H	30,0	1,18	K	10,2	0,40	L	27,0	1,06	E	38,0	1,50	0,27	0,60
	M I12GS S10 SCHOTT	Male	809411001							D	73,3	2,89													J	20,5	0,81	0,16	0,35
1/2"	F IP12 S12 SCHOTT	Female	809411002	12,5	3	M20x1,5	G	133,0	5,24	F	81,6	3,21	B	27,0	1,06	H	30,0	1,18	K	12,2	0,48	L	27,0	1,06	E	38,0	1,50	0,27	0,59
	M I12GS S12 SCHOTT	Male	809411003							D	73,3	2,89													J	20,5	0,81	0,15	0,33
1/2"	F IP12 S16 SCHOTT	Female	809411006	12,5	3	M24x1,5	G	137,0	5,39	F	83,6	3,29	B	27,0	1,06	H	30,0	1,18	K	16,2	0,64	L	29,0	1,14	E	38,0	1,50	0,28	0,62
	M I12GS S16 SCHOTT	Male	809411007							D	75,3	2,96													J	20,5	0,81	0,17	0,37
3/4"	F IP34 S16 SCHOTT	Female	809411010	19	4	M24x1,5	G	152,5	6,00	F	103,1	4,06	B	36,0	1,42	H	40,0	1,57	K	16,2	0,64	L	29,0	1,14	E	46,0	1,81	0,60	1,33
	M I34 S16 SCHOTT	Male	809411011							D	76,0	2,99													J	29,0	1,14	0,27	0,59
3/4"	F IP34 S20 SCHOTT	Female	809411012	19	4	M30x2	G	166,5	6,56	F	110,1	4,33	B	36,0	1,42	H	40,0	1,57	K	20,0	0,79	L	36,0	1,42	E	46,0	1,81	0,65	1,43
	M I34 S20 SCHOTT	Male	809411013							D	83,0	3,27													J	29,0	1,14	0,31	0,69
1"	F IP100 S20 SCHOTT 38	Female	809411014	25	6	M30x2	G	190,6	7,50	F	129,0	5,08	B	41,0	1,61	H	45,0	1,77	K	20,2	0,80	L	38,0	1,50	E	54,0	2,13	0,94	2,07
	M I100 S20 SCHOTT 38	Male	809411015							D	95,0	3,74													J	34,3	1,35	0,44	0,96
1"	F IP100 S25 SCHOTT	Female	809411016	25	6	M36x2	G	190,6	7,50	F	129,0	5,08	B	41,0	1,61	H	45,0	1,77	K	25,2	0,99	L	38,0	1,50	E	54,0	2,13	0,98	2,16
	M I100 S25 SCHOTT	Male	809411017							D	95,0	3,74													J	34,3	1,35	0,48	1,06

Locknuts available upon request.

Panel mounting on the sleeve: please conctact your Stucchi Technical support to get detailed dimensions.

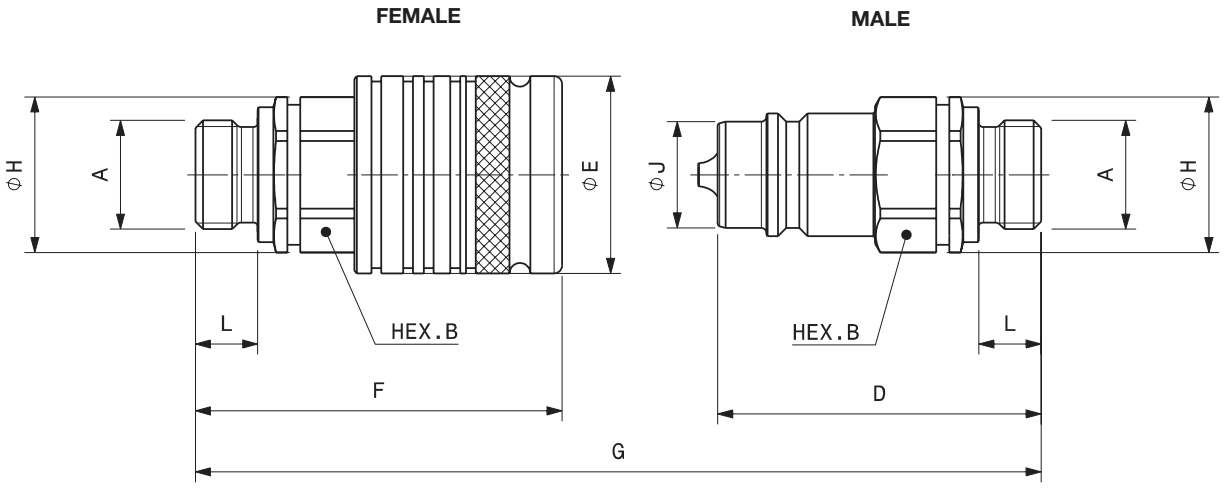

Port description: MALE THREAD BSPP (DIN3852/A)

BODY SIZE	Descriptive Code	Item Code	ISO DN	BG	PORT (A)	Overall Length			Length			Length			Hex			Overall Diameter			Overall Diameter			Weight	
							mm	in		mm	in		mm	in		mm	in		mm	in		mm	in	kg	lb
3/8"	F IP38 3/8 BSP EXT - A	Female 809400012	10	2	3/8'	G	102,2	4,02	F	69,0	2,72	L	12,0	0,47	B	22,0	0,87	H	24,0	0,94	E	32,0	1,26	0,42	0,91
	M I38 3/8 BSP EXT - A	Male 809400013							D	50,8	2,00										J	17,3	0,68	0,08	0,18
1/2"	F IP12 1/2 BSP EXT - A	Female 809400002	12,5	3	1/2'	G	111,0	4,37	F	70,6	2,78	L	12,0	0,47	B	27,0	1,06	H	30,0	1,18	E	38,0	1,50	0,28	0,62
	M I12GS 1/2 BSP EXT - A	Male 809400003							D	62,3	2,45										J	20,5	0,81	0,14	0,30

Panel mounting on the sleeve: please conctact your Stucchi Technical support to get detailed dimensions.

IRS version

IRS Series is the ISO 7241 A interchangeable quick coupling with single body.

It is available with poppet valving style (IRS-VA version) and with ball valving style (IRS-A version).

The specific datasheet is available upon request; please contact Stucchi Technical Support for additional information.

SPARE KIT SEAL FOR FEMALE

Repair kit / OR+BK		
Body Size	Description	Part Number
1/4”	F IP14D	815700924
3/8”	F IP38	815700926
1/2”	F IP12	815700928
3/4”	F IP34	815700930
1”	F IP100	815700932

O-Ring in NBR
BackUp in Teflon®

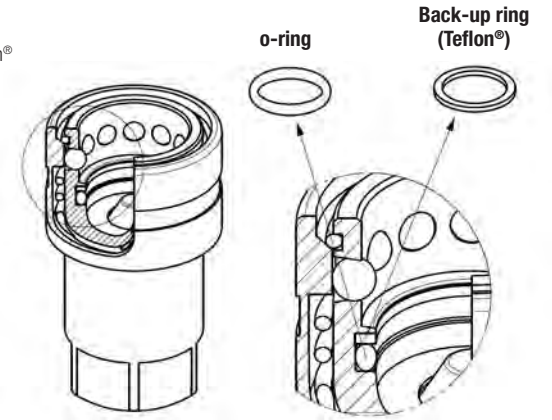

PROTECTIVE CAPS FOR I-IP SERIES

Protective caps are always recommended to protect the couplings from damage, dirt inclusion, and will increase the product life. This is particularly important in agriculture applications where exposure to weather and aggregate materials are common.
The protective caps for I-IP series are manufactured in plastic with connection lanyard (standard color red, other colors available upon request). A flip cap version is also available for the size ½”.

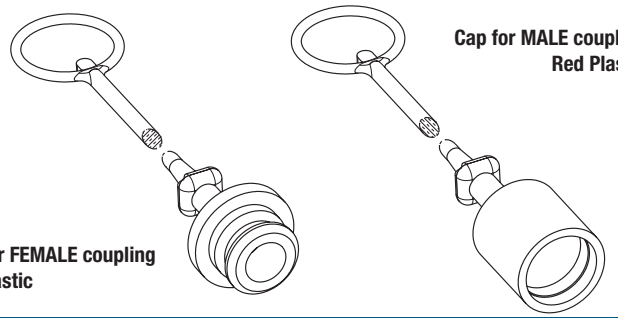

Protective Cap				
Body Size/Description		Part Number		Material/Color
		Plug for Female	Cap for Male	
3/8”	IP38	815000014	815000015	Plastic/Red
1/2”	IP12	815000004	815000005	Plastic/Red
3/4”	IP34	815000016	815000017	Plastic/Red
1”	IP100	815000018	815000019	Plastic/Red

Flip cap for FEMALE coupling
Plastic

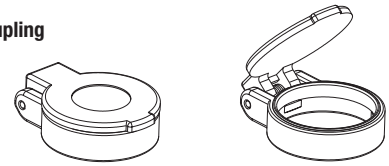

Closed ***Open***

Protective Cap			
Body Size/Description		Part Number	Material/Color
		Plug for Female	
1/2”	IP12	815200004	Plastic/Red

STUCCHI Quick Couplings Catalog - December 2024 - All right reserved.
Texts, data and illustrations mentioned in this catalogue may be changed by Stucchi at any time, without notice; always refer to the version uploaded on the English version of stucchigroup.com/en website for the latest release. In case of doubt, please contact Stucchi technical service.

IRSERIES

INTERCHANGE > **With similar couplings, ISO 7241 A (size ½" only)**

Stucchi®

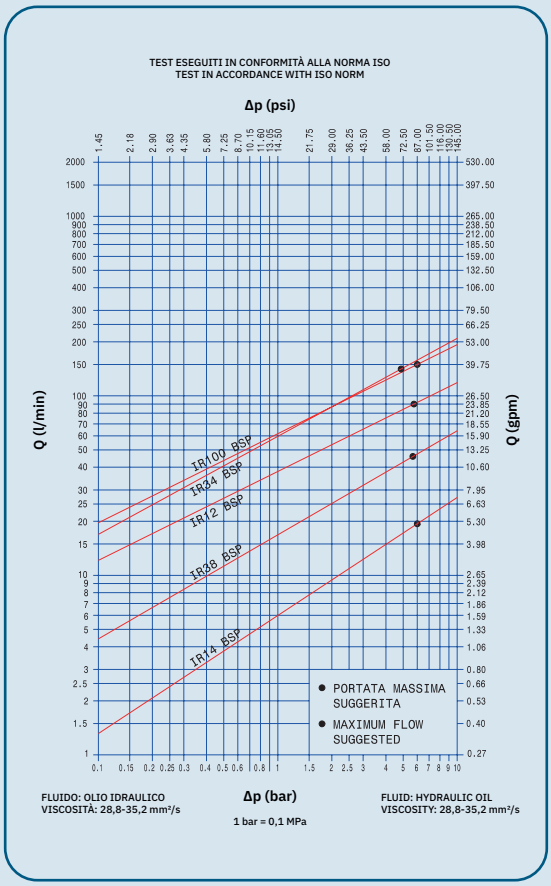

TECHNICAL FEATURES AND OPTIONS

Interchange
With similar couplings, ISO 7241 A (size 1/2" only)

Sealing description
Nitrile NBR

Connection system
Single acting sleeve

Available sizes
from 1/4" to 1"

Material /treatment
Carbon steel /Cr3

Available threads
BSP - NPT

Operating pressure
Up to 300 bar

Locking mechanism
Locking Ball system

Flow rate
Up to 150 l/min

Temperature (°C)
-20°C / +100°C

Valving style
Ball

Connection under pressure
Connection: not allowed
Disconnection: not allowed

BENEFITS

- Ball valves in hardened steel provide a good wearing resistance.
- Compact slim design.
- Simple to use.

HOW TO USE

- Before to connect, clean the mating surface of the couplings to avoid dirt inclusion in the circuit.
- To connect pull back the sleeve of the female coupling, align the female with the male coupling and push one into the other until both halves are fully connected and release the sleeve.
- To disconnect push back the sleeve of the female coupling, pull out the mating half.

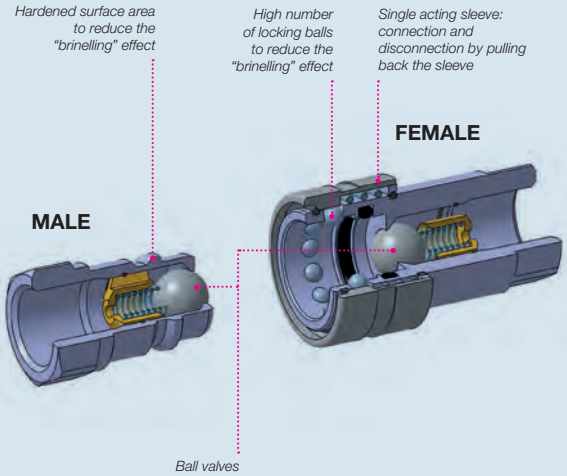

MAIN APPLICATIONS

Stucchi®

PERFORMANCES

Size		Series/Size	Max. flow suggested		Connect force		Disconnect force		Spillage*
in	mm (ISO)		l/min	gpm	N	lbf	N	lbf	ml
1/4		IR14	24	5,30	50	11,25	45	10,13	0,13
3/8		IR38	46	12,19	125	28,13	45	10,13	0,45
1/2	12,5	IR12**	90	23,85	80	18,00	50	11,25	2,30
3/4		IR34	148	39,22	190	42,75	45	10,13	4,50
1		IR100	150	39,75	100	22,50	45	10,13	6,00

Size	Series/Size	Max. operating pressure						Burst pressure					
		Coupled		Male		Female		Coupled		Male		Female	
in		MPa	psi	MPa	psi	MPa	psi	MPa	psi	MPa	psi	MPa	psi
1/4	IR14	30	4350	30	4350	30	4350	100	14500	100	14500	100	14500
3/8	IR38	30	4350	30	4350	30	4350	100	14500	100	14500	90	13050
1/2	IR12**	25	3625	20	2900	20	2900	80	11600	55	7975	55	7975
3/4	IR34	25	3625	20	2900	25	3625	100	14500	60	8700	90	13050
1	IR100	20	2900	20	2900	20	2900	80	11600	60	8700	80	11600

* Spillage is an indicative value of the fluid loss during disconnection (according to ISO norm test method).
** Size 1/2" is ISO7241-1/A interchangeable.

Different possible configurations:
TIC version, shielded poppet to eliminate flow-checking when used with connect-under-pressure competitor couplers.

Temperature range:
Seals in NBR (Nitrile): from -20 °C to +100 °C (from -4 °F to +212 °F).
Please read carefully Instructions and warnings for proper selection of the products.

Tests performed:
Qualification tests have been performed with hydraulic oil using couplings with NBR (Nitrile) seals.
The max. operating pressure have been verified for 100.000 impulses according to ISO norm test method.

⚠ WARNING

A defect, a wrong choice or an improper use of products, can cause injury to persons, animals and objects.
Never connect or disconnect with dynamic pressure (e.g. pump on).
Do not couple-uncouple with flow and/or pressure in the circuit.
Do not couple-uncouple when the temperature inside of the circuit is higher than 80 °C (176 °F).
Check the maximum allowable working pressure of the port in use.
Make sure that the medium used is compatible with seal and material as indicated for each series.
In case of doubt please contact Stucchi Technical Support.
The interchangeability is mentioned under the assumption that the manufacturer of the considered products has not changed any dimension.
It is MANDATORY to read and closely follow the instructions. Last updated version always apply at time of installation, see latest written Instructions on Stucchi website (stucchigroup.com) before selecting or using Stucchi products.

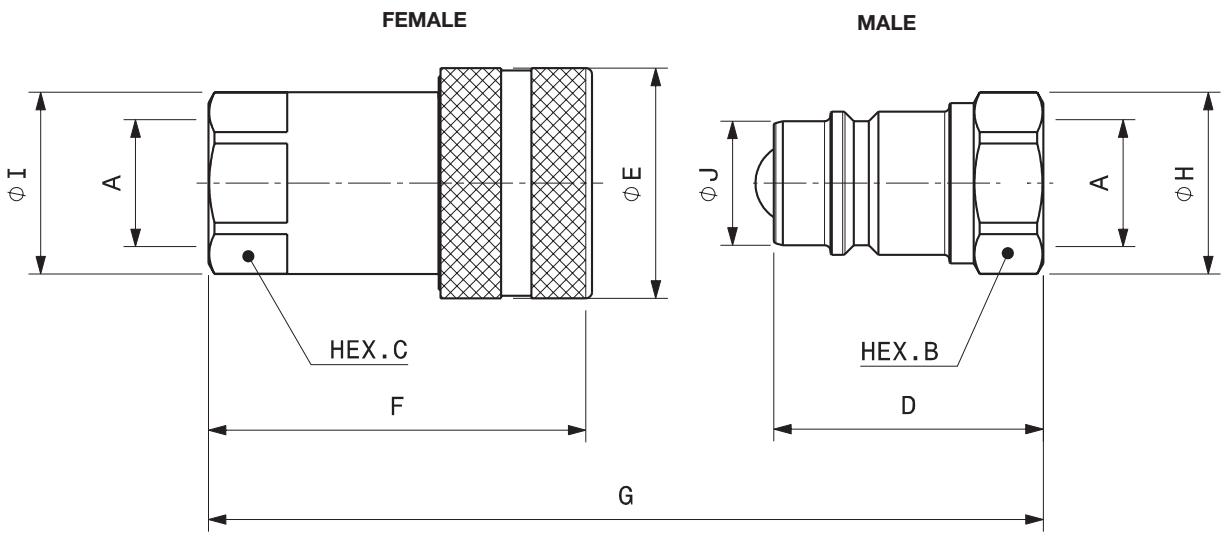

Port description: FEMALE THREAD BSPP (ISO 1179-1)

BODY SIZE	Descriptive Code	Item Code	ISO DN	PORT (A)	Overall Length	mm	in	Length	mm	in	Hex	mm	in	Overall Diameter	mm	in	Body Diameter	mm	in	Weight kg	lb
1/4"	F IR14 BSP	Female 800000000	-	1/4"	G	64,4	2,54	F	48,9	1,93	C	19,0	0,75	I	21,0	0,83	E	27,0	1,06	0,11	0,25
	M IR14 BSP	Male 800000001						D	32,5	1,28	B	19,0	0,75	H	20,8	0,82	J	14,2	0,56	0,04	0,08
3/8"	F IR38 BSP	Female 800000002	-	3/8"	G	76,3	3,00	F	58,3	2,30	C	24,0	0,94	I	26,5	1,04	E	34,0	1,34	0,22	0,49
	M IR38 BSP	Male 800000003						D	38,0	1,50	B	24,0	0,94	H	27,7	1,09	J	19,0	0,75	0,08	0,17
1/2"	F IR12 BSP	Female 800000004	12,5	1/2"	G	86,3	3,40	F	63,3	2,49	C	27,0	1,06	I	30,0	1,18	E	38,0	1,50	0,24	0,54
	M IR12 BSP	Male 800000005						D	44,5	1,75	B	27,0	1,06	H	30,0	1,18	J	20,5	0,81	0,10	0,21
3/4"	F IR34 BSP	Female 800000006	-	3/4"	G	118,3	4,66	F	90,3	3,56	C	38,0	1,50	I	43,0	1,69	E	48,0	1,89	0,68	1,50
	M IR34 BSP	Male 800000007						D	59,0	2,32	B	36,0	1,42	H	38,5	1,52	J	26,9	1,06	0,19	0,43
3/4"	F IR34FA BSP	Female 820000020 *	-	3/4"	G	106,5	4,19	F	82,0	3,23	C	38,0	1,50	I	41,8	1,65	E	46,3	1,82	0,50	1,10
	M IR34FA BSP	Male 820000021 *						D	53,0	2,09	B	34,0	1,34	H	39,1	1,54	J	28,0	1,10	0,19	0,41
1"	F IR100 BSP	Female 800000008	-	1"	G	132,8	5,23	F	99,6	3,92	C	45,0	1,77	I	52,0	2,05	E	54,0	2,13	0,87	1,92
	M IR100 BSP	Male 800000009						D	66,1	2,60	B	41,0	1,61	H	44,8	1,76	J	31,4	1,24	0,30	0,66

* alternative interchange

IR-TIC Version designed for high backflow

BODY SIZE	Descriptive Code	Item Code	ISO DN	PORT (A)	Overall Length	mm	in	Length	mm	in	Hex	mm	in	Overall Diameter	mm	in	Body Diameter	mm	in	Weight kg	lb
1/2"	M IR12TIC BSP	Male 800000011	12,5	1/2"	G	86,3	3,40	D	47,0	1,85	B	27	1,06	H	30,0	1,18	J	20,5	0,81	0,10	0,21

TIC VERSION: shielded valving to prevent flow-checking when used with connect-under-pressure competitor couplers.

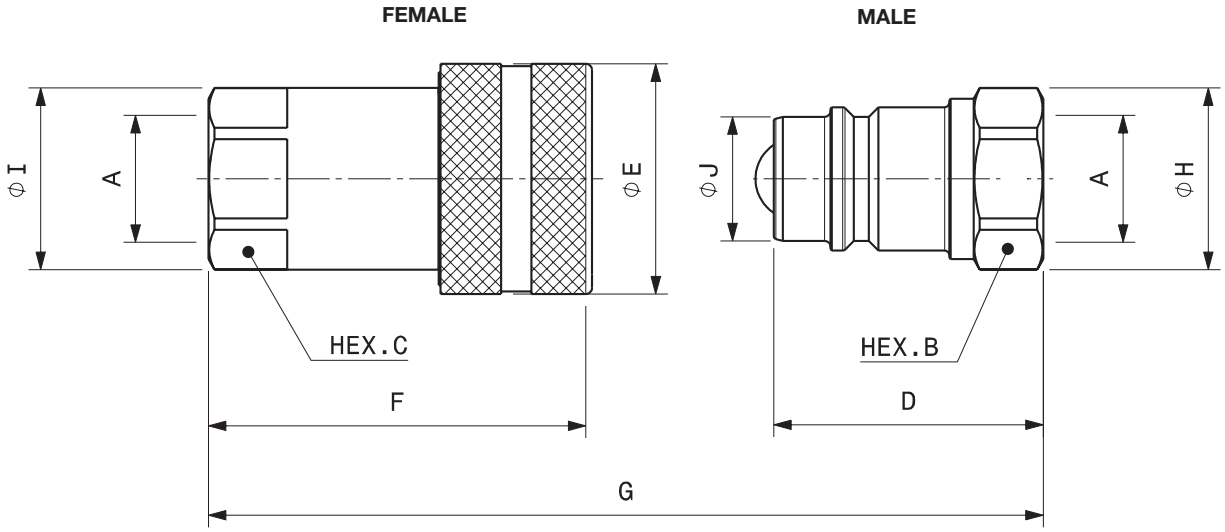

Port description: FEMALE THREAD NPT (ANSI B1.20.1)

BODY SIZE	Descriptive Code	Item Code		ISO DN	PORT (A)	Overall Length mm	Overall Length in	Length mm	Length in	Hex mm	Hex in	Overall Diameter mm	Overall Diameter in	Body Diameter mm	Body Diameter in	Weight kg	Weight lb
1/4"	F IR14 NPT	Female	800001000	-	1/4"	G 64,4	2,54	F 48,9	1,93	C 19,0	0,75	I 21,0	0,83	E 27,0	1,06	0,13	0,28
	M IR14 NPT	Male	800001001					D 32,5	1,28	B 19,0	0,75	H 20,8	0,82	J 14,2	0,56	0,04	0,09
3/8"	F IR38 NPT	Female	800001002	-	3/8"	G 76,3	3,00	F 58,3	2,30	C 24,0	0,94	I 26,5	1,04	E 34,0	1,34	0,22	0,49
	M IR38 NPT	Male	800001003					D 38,0	1,50	B 24,0	0,94	H 27,7	1,09	J 19,0	0,75	0,08	0,18
1/2"	F IR12 NPT	Female	800001004	12,5	1/2"	G 86,3	3,40	F 63,3	2,49	C 27,0	1,06	I 30,0	1,18	E 38,0	1,50	0,28	0,61
	M IR12 NPT	Male	800001005					D 44,5	1,75	B 27,0	1,06	H 30,0	1,18	J 20,5	0,81	0,09	0,20
3/4"	F IR34 NPT	Female	800001006	-	3/4"	G 118,3	4,66	F 90,3	3,56	C 38,0	1,50	I 43,0	1,69	E 48,0	1,89	0,70	1,54
	M IR34 NPT	Male	800001007					D 59,0	2,32	B 36,0	1,42	H 38,5	1,52	J 26,9	1,06	0,21	0,47
1"	F IR100 NPT	Female	800001008	-	1"	G 132,8	5,23	F 99,6	3,92	C 45,0	1,77	I 52,0	2,05	E 54,0	2,13	0,89	1,97
	M IR100 NPT	Male	800001009					D 66,1	2,60	B 41,0	1,61	H 44,8	1,76	J 31,4	1,24	0,30	0,66

IR-TIC Version designed for high backflow

BODY SIZE	Descriptive Code	Item Code		ISO DN	PORT (A)	Overall Length mm	Overall Length in	Length mm	Length in	Hex mm	Hex in	Overall Diameter mm	Overall Diameter in	Body Diameter mm	Body Diameter in	Weight kg	Weight lb
1/2"	M IR12TIC NPT	Male	800001011	12,5	1/2"	G 86,3	3,40	D 47,0	1,85	B 27,0	1,06	H 30,0	1,18	J 20,5	0,81	0,10	0,21

TIC VERSION: shielded valving to prevent flow-checking when used with connect-under-pressure competitor couplers.

SPARE KIT SEAL FOR FEMALE

Repair kit / OR		
Body Size	Description	Part Number
1/4”	F IR14	815700348
3/8”	F IR38	815700350
1/2”	F IR12	815700352
3/4”	F IR34	815700354
3/4”	F IR34 FA	815700734
1”	F IR100	815700356

O-Ring in NBR

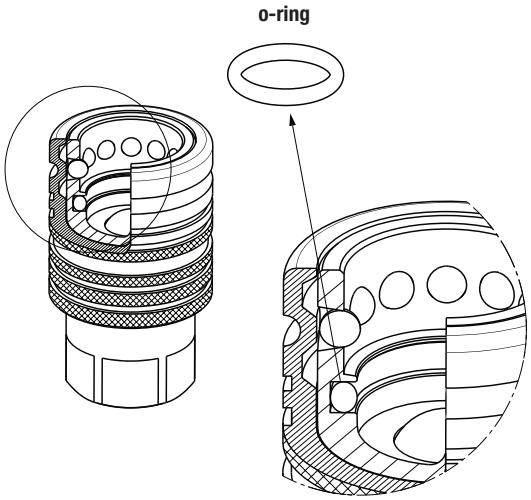

PROTECTIVE CAPS FOR IR SERIES

Protective caps are always recommended to protect the couplings from damage, dirt inclusion, and will increase the product life. This is particularly important in agriculture applications where exposure to weather and aggregate materials are common.
The protective caps for IR series are manufactured in plastic with connection lanyard (standard color red, other colors available upon request).

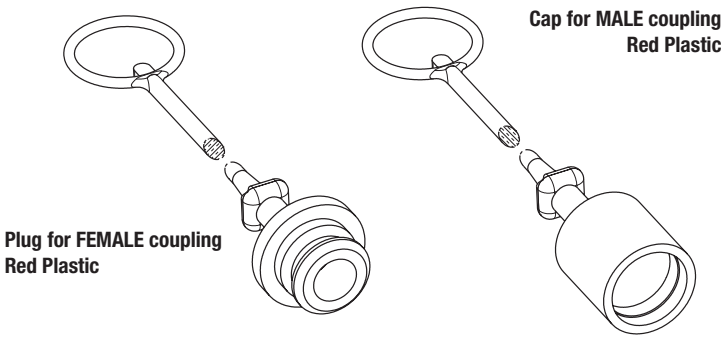

Protective Cap				
Body Size/Description		Part Number		Material/Color
		Plug for Female	Cap for Male	
1/4”	IR14	815000000	815000001	Plastic/Red
3/8”	IR38	815000002	815000003	Plastic/Red
1/2”	IR12	815000004	815000005	Plastic/Red
3/4”	IR34	815000006	815000007	Plastic/Red
1”	IR100	815000008	815000009	Plastic/Red

STUCCHI Quick Couplings Catalog - December 2024 - All right reserved.
Texts, data and illustrations mentioned in this catalogue may be changed by Stucchi at any time, without notice; always refer to the version uploaded on the English version of stucchigroup.com/en website for the latest release. In case of doubt, please contact Stucchi technical service.

IR-VSERIES

INTERCHANGE > **With similar couplings IR series, ISO 7241 SERIES "A" (SIZE ½" only)**

Stucchi®

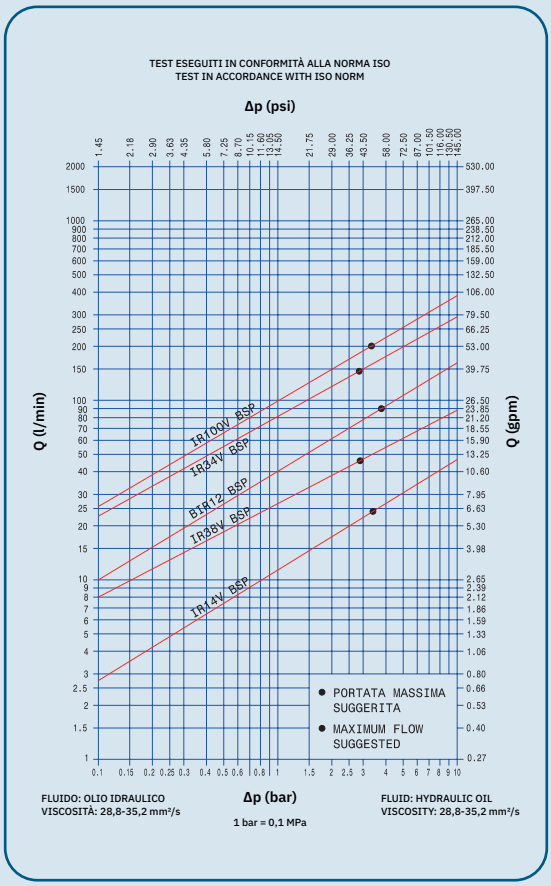

TECHNICAL FEATURES AND OPTIONS

Interchange
With similar couplings IR series, ISO 7241 SERIES "A" (SIZE 1/2" only)

Sealing description
Nitrile NBR

Connection system
Single acting sleeve

Available sizes
from 1/4" to 1"

Material /treatment
Carbon steel /Cr3

Available threads
BSP - NPT - SAE

Operating pressure
Up to 300 bar

Locking mechanism
Ball Locking

Flow rate
Up to 200 l/min

Temperature (°C)
-20°C / +100°C

Valving style
Poppet

Connection under pressure
Connection: not allowed
Disconnection: not allowed

BENEFITS

- The poppet valve with elastomer seal provides maximum sealing of the couplings when disconnected.
- Shape of internal parts is designed to reduce turbulence and pressure drop.
- Compact slim design.
- Simple to use.

HOW TO USE

- Before to connect, clean the mating surface of the couplings to avoid dirt inclusion in the circuit.
- To connect pull back the sleeve of the female coupling, align the female with the male coupling and push one into the other until both halves are fully connected and release the sleeve.
- To disconnect push back the sleeve of the female coupling, pull out the mating half.

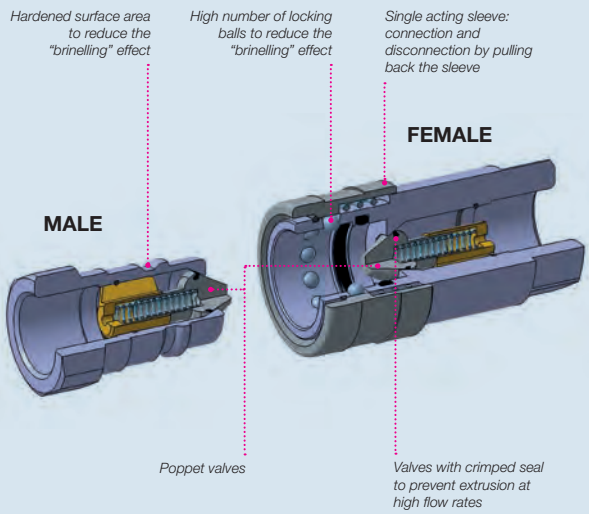

MAIN APPLICATIONS

Stucchi®

PERFORMANCES

Size		Series/Size	Max. flow suggested		Connect force		Disconnect force		Spillage*
in	mm (ISO)		l/min	gpm	N	lbf	N	lbf	ml
1/4		IR14V	24	6,36	80	18,00	40	9,00	0,33
3/8		IR38V	46	12,19	120	27,00	35	7,88	1,30
1/2	12,5	BIR12**	90	23,85	70	15,75	55	12,38	2,10
3/4		IR34V	148	39,22	175	39,38	45	10,13	4,20
1		IR100V	200	53,00	210	47,25	65	14,63	5,50

Size	Series/Size	Max. operating pressure						Burst pressure					
		Coupled		Male		Female		Coupled		Male		Female	
in		MPa	psi	MPa	psi	MPa	psi	MPa	psi	MPa	psi	MPa	psi
1/4	IR14V	30	4350	30	4350	30	4350	100	14500	100	14500	100	14500
3/8	IR38V	30	4350	30	4350	30	4350	100	14500	100	14500	100	14500
1/2	BIR12**	25	3625	25	3625	25	3625	80	11600	80	11600	100	14500
3/4	IR34V	25	3625	25	3625	25	3625	100	14500	90	13050	100	14500
1	IR100V	20	2900	20	2900	20	2900	80	11600	80	11600	80	11600

* Spillage is an indicative value of the fluid loss during disconnection (according to ISO norm test method).
** Size 1/2" is ISO7241-1/A interchangeable.

Different possible configurations:
PL version (free flow without valve): available upon request.
SAE thread upon request.

Temperature range:
Standard seals in NBR (Nitrile): from -20 °C to +100 °C (from -4 °F to +212 °F).
Upon request seals in FKM (VITON®): from -15°C to +180°C (from +5 °F to +356 °F).Please read carefully Instructions and warnings for proper selection of the products.

Tests performed:
Qualification tests have been performed with hydraulic oil using couplings with NBR (Nitrile) seals.
The max. operating pressure have been verified for 100.000 impulses according to ISO norm test method.

⚠ WARNING

A defect, a wrong choice or an improper use of products, can cause injury to persons, animals and objects.
Never connect or disconnect with dynamic pressure (e.g. pump on).
Do not couple-uncouple with flow and/or pressure in the circuit.
Do not couple-uncouple when the temperature inside of the circuit is higher than 80 °C (176 °F).
Check the maximum allowable working pressure of the port in use.
Make sure that the medium used is compatible with seal and material as indicated for each series.
In case of doubt please contact Stucchi Technical Support.
The interchangeability is mentioned under the assumption that the manufacturer of the considered products has not changed any dimension.
It is mandatory to carefully read and closely follow the instructions before selecting or using any Stucchi products.
Always refer to the version uploaded in the Instructions and warning section of stucchigroup.com website for the latest release.
For specific, product-related, instructions, please contact Stucchi technical service.

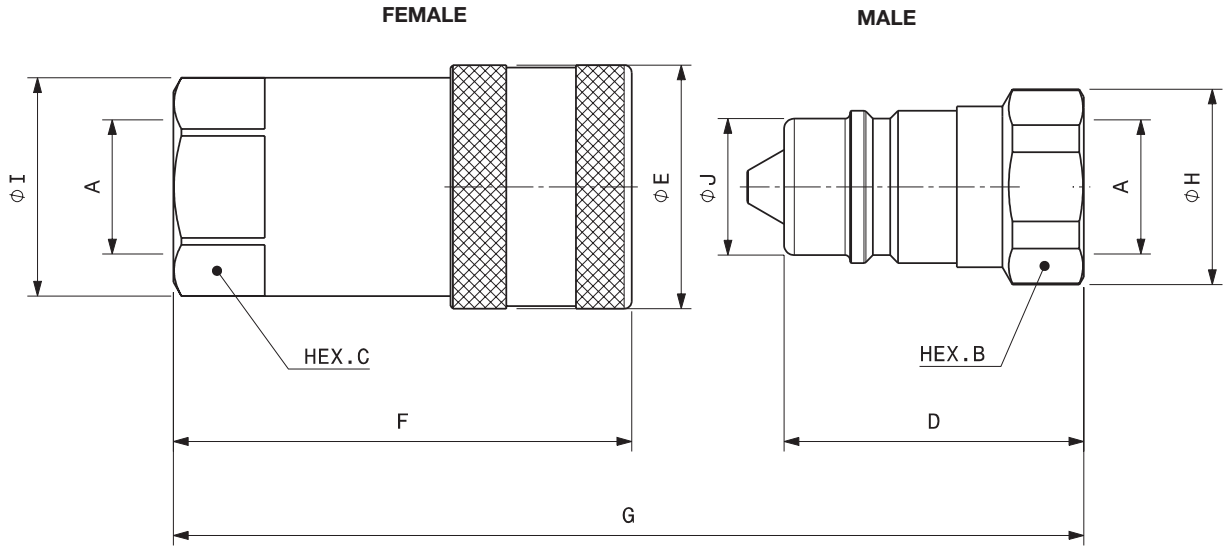

Port description: FEMALE THREAD BSPP (ISO 1179-1)

BODY SIZE	Descriptive Code	Item Code		ISO DN	PORT (A)	Overall Length			Length			Hex			Overall Diameter			Body Diameter			Weight	
							mm	in		mm	in		mm	in		mm	in		mm	in	kg	lb
1/4"	F IR14V BSP	Female	800100000	-	1/4"	G	65,9	2,59	F	50,4	1,98	C	19,0	0,75	I	21,0	0,83	E	27,0	1,06	0,12	0,25
	M IR14V BSP	Male	800100001						D	32,5	1,28	B	19,0	0,75	H	20,8	0,82	J	14,2	0,56	0,04	0,08
3/8"	F IR38V BSP	Female	800100002	-	3/8"	G	76,3	3,00	F	58,3	2,30	C	24,0	0,94	I	26,5	1,04	E	34,0	1,34	0,22	0,47
	M IR38V BSP	Male	800100003						D	38,0	1,50	B	24,0	0,94	H	27,7	1,09	J	19,0	0,75	0,07	0,16
1/2"	F BIR12 BSP	Female	800500004	12,5	1/2"	G	86,3	3,40	F	63,3	2,49	C	27,0	1,06	I	30,0	1,18	E	38,0	1,50	0,25	0,54
	M BIR12 BSP	Male	800500005						D	44,5	1,75	B	27,0	1,06	H	29,0	1,14	J	20,5	0,81	0,08	0,19
3/4"	F IR34V BSP	Female	800100004	-	3/4"	G	118,3	4,66	F	90,3	3,56	C	38,0	1,50	I	43,0	1,69	E	48,0	1,89	0,68	1,50
	M IR34V BSP	Male	800100005						D	59,0	2,32	B	36,0	1,42	H	38,5	1,52	J	26,9	1,06	0,19	0,41
3/4"	F IR34VFA BSP	Female	820000022 *	-	3/4"	G	106,5	4,19	F	82,0	3,23	C	38,0	1,50	I	41,8	1,65	E	46,3	1,82	0,49	1,07
	M IR34VFA BSP	Male	820000023 *						D	53,0	2,09	B	34,0	1,34	H	39,1	1,54	J	28,0	1,10	0,18	0,40
1"	F IR100V BSP	Female	800100006	-	1"	G	128,8	5,07	F	97,6	3,84	C	45,0	1,77	I	52,0	2,05	E	54,0	2,13	0,83	1,83
	M IR100V BSP	Male	800100007						D	64,1	2,52	B	41,0	1,61	H	44,8	1,76	J	31,4	1,24	0,26	0,58

* alternative interchange

Port description: FEMALE THREAD NPT (ANSI B1.20.1)

BODY SIZE	Descriptive Code	Item Code		ISO DN	PORT (A)	Overall Length			Length			Hex			Overall Diameter			Body Diameter			Weight	
							mm	in		mm	in		mm	in		mm	in		mm	in	kg	lb
1/4"	F IR14V NPT	Female	800101000	-	1/4"	G	65,9	2,59	F	50,4	1,98	C	19,0	0,75	I	21,0	0,83	E	27,0	1,06	0,13	0,28
	M IR14V NPT	Male	800101001						D	32,5	1,28	B	19,0	0,75	H	20,8	0,82	J	14,2	0,56	0,04	0,09
3/8"	F IR38V NPT	Female	800101002	-	3/8"	G	76,3	3,00	F	58,3	2,30	C	24,0	0,94	I	26,5	1,04	E	34,0	1,34	0,22	0,49
	M IR38V NPT	Male	800101003						D	38,0	1,50	B	24,0	0,94	H	27,7	1,09	J	19,0	0,75	0,08	0,18
1/2"	F BIR12 NPT	Female	800501004	12,5	1/2"	G	86,3	3,40	F	63,3	2,49	C	27,0	1,06	I	30,0	1,18	E	38,0	1,50	0,25	0,54
	M BIR12 NPT	Male	800501005						D	44,5	1,75	B	27,0	1,06	H	29,0	1,14	J	20,5	0,81	0,08	0,19
3/4"	F IR34V NPT	Female	800101004	-	3/4"	G	118,3	4,66	F	90,3	3,56	C	38,0	1,50	I	43,0	1,69	E	48,0	1,89	0,66	1,46
	M IR34V NPT	Male	800101005						D	59,0	2,32	B	36,0	1,42	H	38,5	1,52	J	26,9	1,06	0,19	0,41
1"	F IR100V NPT	Female	800101006	-	1"	G	128,8	5,07	F	97,6	3,84	C	45,0	1,77	I	52,0	2,05	E	54,0	2,13	0,86	1,90
	M IR100V NPT	Male	800101007						D	64,1	2,52	B	41,0	1,61	H	44,8	1,76	J	31,4	1,24	0,28	0,61

SPARE KIT SEAL FOR FEMALE

Repair kit / OR		
Body Size	Description	Part Number
1/4”	F IR-V14	815700348
3/8”	F IR-V38	815700350
1/2”	F IR-V12	815700352
3/4”	F IR-V34	815700354
3/4"	F IR34V FA	815700734
1”	F IR-V100	815700356

O-Ring in NBR

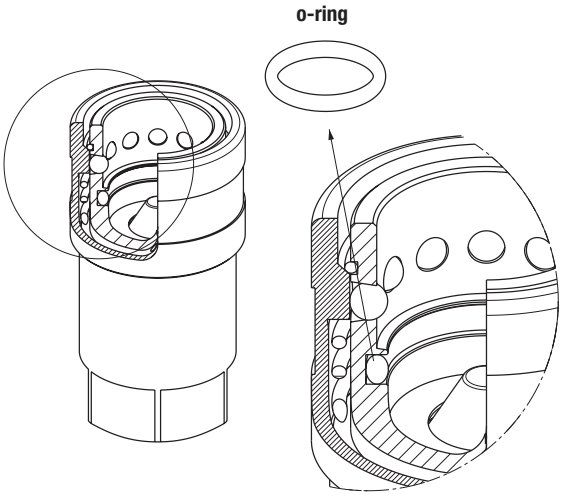

PROTECTIVE CAPS FOR IR-V SERIES

Protective caps are always recommended to protect the couplings from damage, dirt inclusion, and will increase the product life. This is particularly important in agriculture applications where exposure to weather and aggregate materials are common.
The protective caps for IR-V series are manufactured in plastic with connection lanyard (standard color red, other colors available upon request).

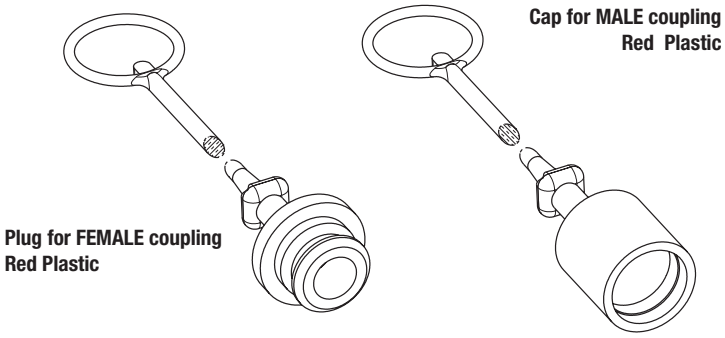

Protective Cap				
Body Size/Description		Part Number		Material/Color
		Plug for Female	Cap for Male	
1/4”	IR-V 14	815000000	815000001	Plastic/Red
3/8”	IR-V 38	815000002	815000003	Plastic/Red
1/2”	IR-V 12	815000004	815000005	Plastic/Red
3/4”	IR-V 34	815000006	815000007	Plastic/Red
1”	IR-V 100	815000008	815000009	Plastic/Red

STUCCHI Quick Couplings Catalog - December 2024 - All right reserved.
Texts, data and illustrations mentioned in this catalogue may be changed by Stucchi at any time, without notice; always refer to the version uploaded on the English version of stucchigroup.com/en website for the latest release. In case of doubt, please contact Stucchi technical service.

IRBSERIES

INTERCHANGE > **ISO 7241 B**

Stucchi®

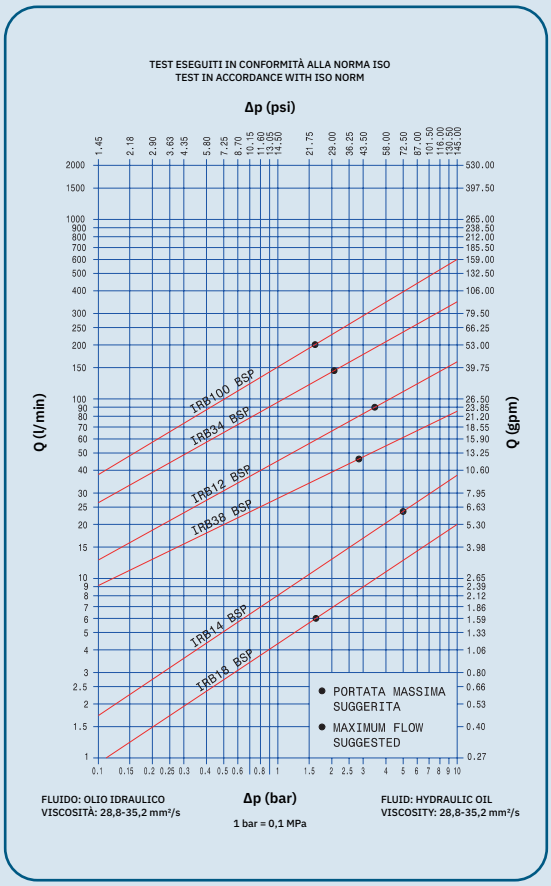

TECHNICAL FEATURES AND OPTIONS

Interchange
ISO 7241 B

Sealing description
Nitrile NBR

Connection system
Single acting sleeve

Available sizes
From 1/8" to 1"

Material /treatment
Carbon steel /Cr3

Available threads
BSP - NPT - SAE

Operating pressure
Up to 350 bar

Locking mechanism
Locking Ball system

Flow rate
Up to 200 l/min

Temperature (°C)
-20°C / +100°C

Valving style
Poppet

Connection under pressure
Connection: not allowed
Disconnection: not allowed

BENEFITS

- The poppet valve with elastomer seal provides maximum sealing of the couplings when disconnected.
- Shape of internal parts is designed to reduce turbulence and pressure drop.
- Compact slim design.
- Simple to use.

HOW TO USE

- Before to connect, clean the mating surface of the couplings to avoid dirt inclusion in the circuit.
- To connect pull back the sleeve of the female coupling, align the female with the male coupling and push one into the other until both halves are fully connected and release the sleeve.
- To disconnect push back the sleeve of the female coupling, pull out the mating half.

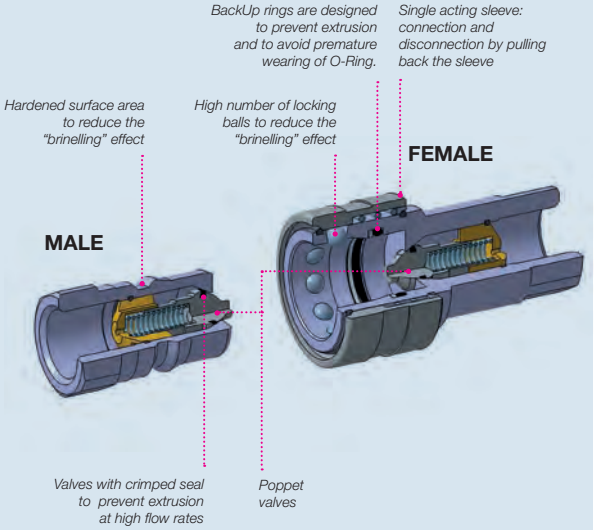

MAIN APPLICATIONS

PERFORMANCES

Size		Series/Size	Max. flow suggested		Connect force		Disconnect force		Spillage*
in	mm (ISO)		l/min	gpm	N	lbf	N	lbf	ml
1/8	5,0	IRB18	6	1,59	75	16,88	35	7,88	0,18
1/4	6,3	IRB14	24	6,36	50	11,25	35	7,88	0,33
3/8	10,0	IRB38	46	12,19	80	18,00	45	10,13	2,20
1/2	12,5	IRB12	90	23,85	105	23,63	35	7,88	3,00
3/4	19,0	IRB34	148	39,22	125	28,13	40	9,00	9,40
1	25,0	IRB100	200	53,00	130	29,25	45	10,13	14,00

Size	Series/Size	Max. operating pressure						Burst pressure					
		Coupled		Male		Female		Coupled		Male		Female	
in		MPa	psi	MPa	psi	MPa	psi	MPa	psi	MPa	psi	MPa	psi
1/8	IRB18	35	5075	35	5075	35	5075	120	17400	120	17400	120	17400
1/4	IRB14	35	5075	35	5075	35	5075	100	14500	100	14500	100	14500
3/8	IRB38	30	4350	30	4350	30	4350	100	14500	100	14500	100	14500
1/2	IRB12	28	4060	28	4060	28	4060	100	14500	100	14500	100	14500
3/4	IRB34	23	3335	23	3335	23	3335	92	13340	92	13340	92	13340
1	IRB100	18	2610	18	2610	18	2610	72	10440	72	10440	72	10440

* Spillage is an indicative value of the fluid loss during disconnection (according to ISO norm test method).

Different possible configurations:
PL version (free flow without valve) available upon request.
SAE thread available upon request.

Temperature range:
Standard seals in NBR (Nitrile): from -20°C to +100°C (from -4 °F to +212 °F).
Upon request seals in FKM (VITON®): from -15°C to +180°C (from +5 °F to +356 °F).
Please read carefully Instructions and warnings for proper selection of the products.

Tests performed:
Qualification tests have been performed with hydraulic oil using couplings with NBR (Nitrile) seals.
The max. operating pressure have been verified for 100.000 impulses according to ISO norm test method.

WARNING

A defect, a wrong choice or an improper use of products, can cause injury to persons, animals and objects.
Never connect or disconnect with dynamic pressure (e.g. pump on).
Do not use the coupling disconnected with high impulse pressure.
Do not couple-uncouple with flow and/or pressure in the circuit.
Do not couple-uncouple when the temperature inside of the circuit is higher than 80 °C (176 °F).
Check the maximum allowable working pressure of the port in use.
Make sure that the medium used is compatible with seal and material as indicated for each series.
In case of doubt please contact Stucchi Technical Support.
The interchangeability is mentioned under the assumption that the manufacturer of the considered products has not changed any dimension.
It is mandatory to carefully read and closely follow the instructions before selecting or using any Stucchi products.
Always refer to the version uploaded in the Instructions and warning section of stucchigroup.com website for the latest release.
For specific, product-related, instructions, please contact Stucchi technical service.

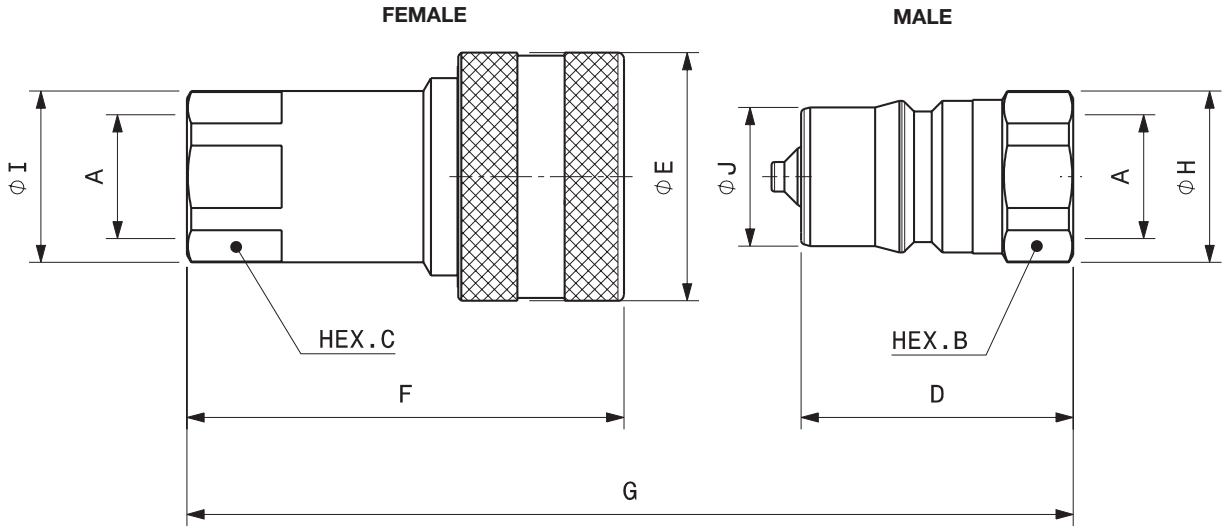

Port description: FEMALE THREAD BSPP (ISO 1179-1)

BODY SIZE	Descriptive Code	Item Code		ISO DN	PORT (A)	Overall Length			Length			Hex			Overall Diameter			Body Diameter			Weight	
							mm	in		mm	in		mm	in		mm	in		mm	in	kg	lb
1/8"	F IRB18 BSP	Female	800600000	5,0	1/8"	G	60,5	2,38	F	48,8	1,92	C	14,0	0,55	I	15,8	0,62	E	23,0	0,91	0,07	0,15
	M IRB18 BSP	Male	800600001						D	30,0	1,18	B	14,0	0,55	H	15,8	0,62	J	10,8	0,43	0,02	0,04
1/4"	F IRB14 BSP	Female	800600002	6,3	1/4"	G	70,7	2,78	F	57,0	2,24	C	19,0	0,75	I	21,2	0,83	E	27,0	1,06	0,12	0,26
	M IRB14 BSP	Male	800600003						D	35,0	1,38	B	19,0	0,75	H	20,8	0,82	J	14,2	0,56	0,04	0,08
3/8"	F IRB38 BSP	Female	800600004	10,0	3/8"	G	82,7	3,26	F	66,0	2,60	C	24,0	0,94	I	27,0	1,06	E	34,0	1,34	0,22	0,49
	M IRB38 BSP	Male	800600005						D	41,0	1,61	B	24,0	0,94	H	26,0	1,02	J	19,1	0,75	0,07	0,15
1/2"	F IRB12 BSP	Female	800600006	12,5	1/2"	G	92,6	3,65	F	73,9	2,91	C	27,0	1,06	I	29,0	1,14	E	42,0	1,65	0,32	0,71
	M IRB12 BSP	Male	800600007						D	46,0	1,81	B	27,0	1,06	H	29,0	1,14	J	23,5	0,93	0,10	0,22
3/4"	F IRB34 BSP	Female	800600008	19,0	3/4"	G	111,1	4,37	F	90,1	3,55	C	36,0	1,42	I	38,5	1,52	E	50,0	1,97	0,56	1,24
	M IRB34 BSP	Male	800600009						D	55,0	2,17	B	36,0	1,42	H	38,5	1,52	J	31,4	1,24	0,20	0,45
1"	F IRB100 BSP	Female	800600010	25,0	1"	G	133,2	5,24	F	106,2	4,18	C	41,0	1,61	I	44,8	1,76	E	60,0	2,36	0,86	1,90
	M IRB100 BSP	Male	800600011						D	66,0	2,60	B	41,0	1,61	H	44,8	1,76	J	37,7	1,48	0,33	0,72

Port description: FEMALE THREAD NPT (ANSI B1.20.1)

BODY SIZE	Descriptive Code	Item Code		ISO DN	PORT (A)	Overall Length			Length			Hex			Overall Diameter			Body Diameter			Weight	
							mm	in		mm	in		mm	in		mm	in		mm	in	kg	lb
1/8"	F IRB18 NPT	Female	800601000	5,0	1/8"	G	60,5	2,38	F	48,8	1,92	C	14,0	0,55	I	15,8	0,62	E	23,0	0,91	0,07	0,15
	M IRB18 NPT	Male	800601001						D	30,0	1,18	B	14,0	0,55	H	15,8	0,62	J	10,8	0,43	0,02	0,04
1/4"	F IRB14 NPT	Female	800601002	6,3	1/4"	G	70,7	2,78	F	57,0	2,24	C	19,0	0,75	I	21,2	0,83	E	27,0	1,06	0,12	0,26
	M IRB14 NPT	Male	800601003						D	35,0	1,38	B	19,0	0,75	H	20,8	0,82	J	14,2	0,56	0,04	0,08
3/8"	F IRB38 NPT	Female	800601004	10,0	3/8"	G	82,7	3,26	F	66,0	2,60	C	24,0	0,94	I	27,0	1,06	E	34,0	1,34	0,22	0,49
	M IRB38 NPT	Male	800601005						D	41,0	1,61	B	24,0	0,94	H	26,0	1,02	J	19,1	0,75	0,07	0,15
1/2"	F IRB12 NPT	Female	800601006	12,5	1/2"	G	92,6	3,65	F	73,9	2,91	C	27,0	1,06	I	29,0	1,14	E	42,0	1,65	0,32	0,71
	M IRB12 NPT	Male	800601007						D	46,0	1,81	B	27,0	1,06	H	29,0	1,14	J	23,5	0,93	0,11	0,23
3/4"	F IRB34 NPT	Female	800601008	19,0	3/4"	G	111,1	4,37	F	90,1	3,55	C	36,0	1,42	I	38,5	1,52	E	50,0	1,97	0,56	1,24
	M IRB34 NPT	Male	800601009						D	55,0	2,17	B	36,0	1,42	H	38,5	1,52	J	31,4	1,24	0,21	0,46
1"	F IRB100 NPT	Female	800601010	25,0	1"	G	133,2	5,24	F	106,2	4,18	C	41,0	1,61	I	44,8	1,76	E	60,0	2,36	0,88	1,94
	M IRB100 NPT	Male	800601011						D	66,0	2,60	B	41,0	1,61	H	44,8	1,76	J	37,7	1,48	0,34	0,75

SPARE KIT SEAL FOR FEMALE

Repair kit / OR+BK		
Body Size	Description	Part Number
1/8”	F IRB18	815700202
1/4”	F IRB14	815700204
3/8”	F IRB38	815700206
1/2”	F IRB12	815700208
3/4”	F IRB34	815700210
1”	F IRB100	815700212

O-Ring in Nitrile
BackUp in Teflon®

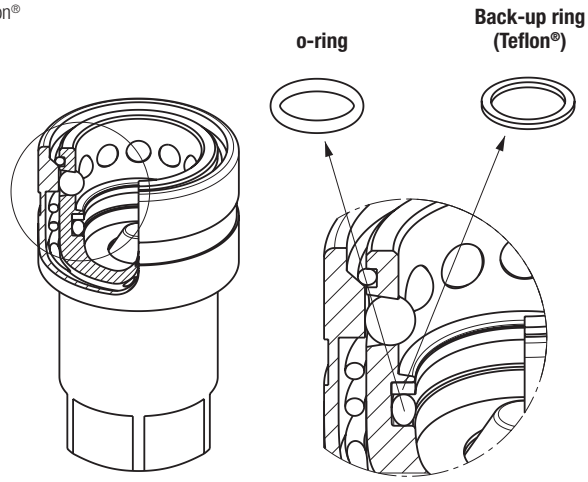

PROTECTIVE CAPS FOR IRB SERIES

Protective caps are always recommended to protect the couplings from damage, dirt inclusion, and will increase the product life. The protective caps for IRB series are manufactured in plastic with connection lanyard (standard color red, other colors available upon request).

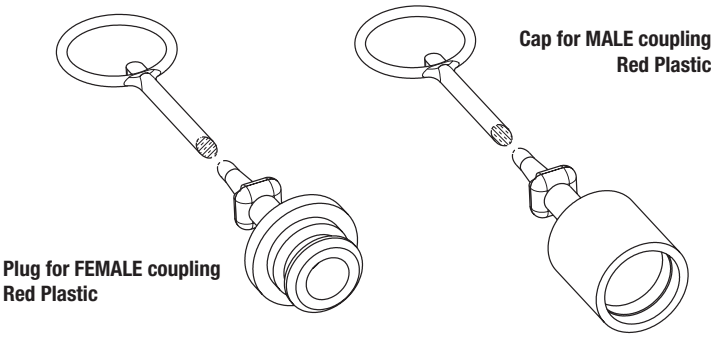

Protective Cap				
Body Size/Description		Part Number		Material/Color
		Plug for Female	Cap for Male	
1/4”	IRB14	815000032	815000033	Plastic/Red
3/8”	IRB38	815000034	815000035	Plastic/Red
1/2”	IRB12	815000036	815000037	Plastic/Red
3/4”	IRB34	815000038	815000039	Plastic/Red
1”	IRB100	815000040	815000041	Plastic/Red

STUCCHI Quick Couplings Catalog - December 2024 - All right reserved.
Texts, data and illustrations mentioned in this catalogue may be changed by Stucchi at any time, without notice; always refer to the version uploaded on the English version of stucchigroup.com/en website for the latest release. In case of doubt, please contact Stucchi technical service.

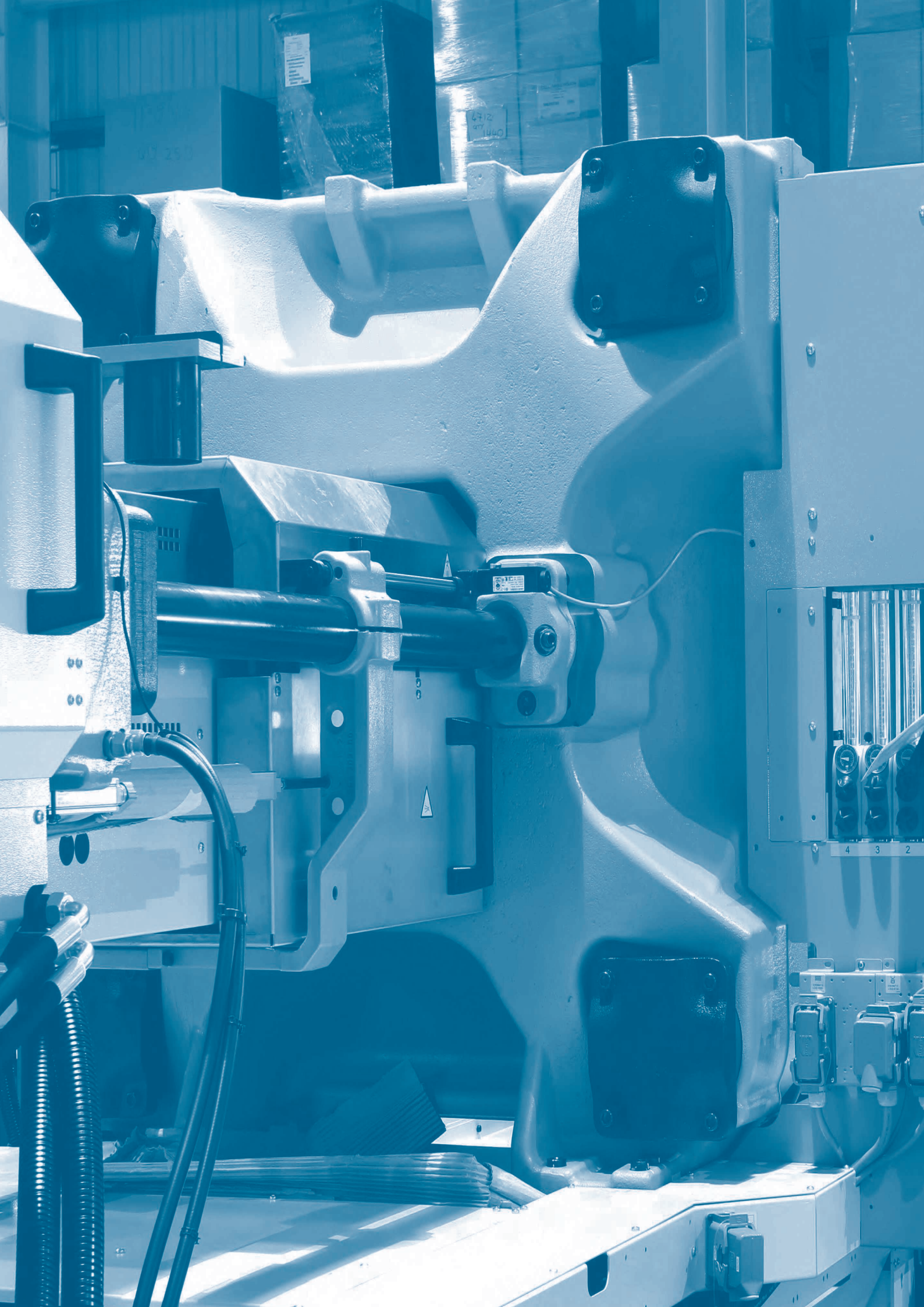
4
3
2

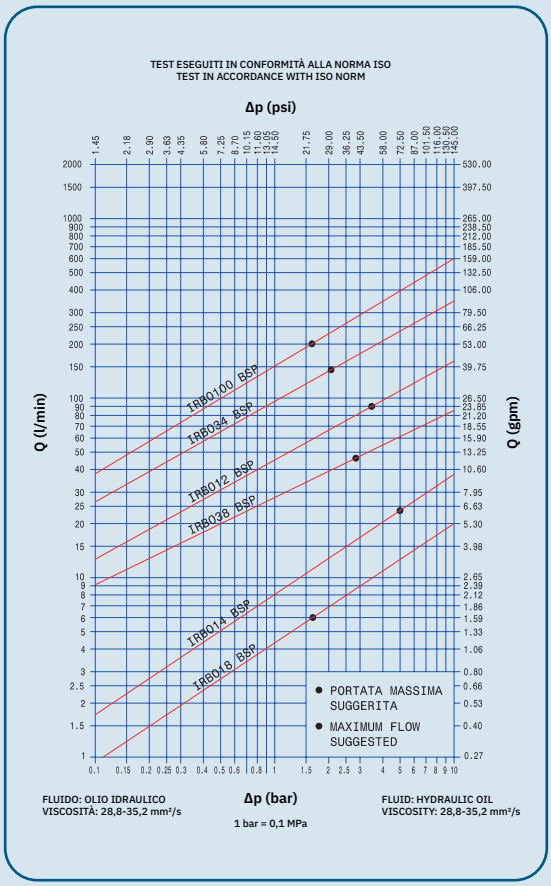

TECHNICAL FEATURES AND OPTIONS

Interchange
ISO 7241 B

Sealing description
FKM (VITON®)

Connection system
Single acting sleeve

Available sizes
From 1/8" to 1"

Material
Brass

Available threads
BSP - NPT

Operating pressure
Up to 200 bar

Locking mechanism
Locking Ball system

Flow rate
Up to 200 l/min

Temperature (°C)
-15°C / + 180°C

Valving style
Poppet

Connection under pressure
Connection: not allowed
Disconnection: not allowed

BENEFITS

- The poppet valve with elastomer seal provides maximum sealing of the couplings when disconnected.
- Shape of internal parts is designed to reduce turbulence and pressure drop.
- Superior corrosion resistance compared to Chrome 3.
- Compact slim design.
- Simple to use.

HOW TO USE

- Before to connect, clean the mating surface of the couplings to avoid dirt inclusion in the circuit.
- To connect pull back the sleeve of the female coupling, align the female with the male coupling and push one into the other until both halves are fully connected and release the sleeve.
- To disconnect push back the sleeve of the female coupling, pull out the mating half.

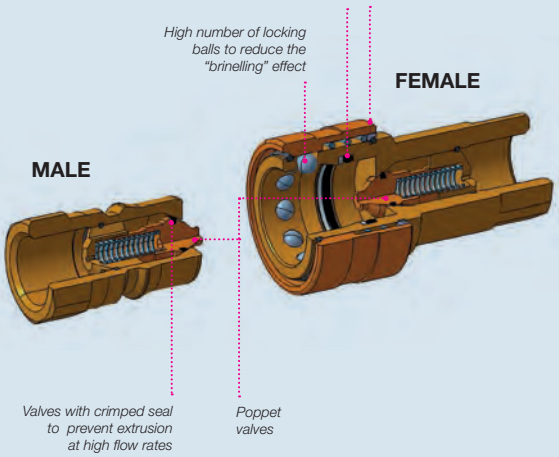

MAIN APPLICATIONS

Stucchi®

PERFORMANCES

Size		Series/Size	Max. flow suggested		Connect force		Disconnect force		Spillage*
in	mm (ISO)		l/min	gpm	N	lbf	N	lbf	ml
1/8	5,0	IRB018	6	1,59	75	16,88	35	7,88	0,18
1/4	6,3	IRB014	24	6,36	60	13,50	30	6,75	0,33
3/8	10,0	IRB038	46	12,19	95	21,38	35	7,88	2,20
1/2	12,5	IRB012	90	23,85	95	21,38	35	7,88	3,00
3/4	19,0	IRB034	148	39,22	125	28,13	40	9,00	9,40
1	25,0	IRB0100	200	53,00	140	31,50	40	9,00	14,00

Size	Series/Size	Max. operating pressure						Burst pressure					
		Coupled		Male		Female		Coupled		Male		Female	
in		MPa	psi	MPa	psi	MPa	psi	MPa	psi	MPa	psi	MPa	psi
1/8	IRB018	20	2900	20	2900	20	2900	80	11600	80	11600	80	11600
1/4	IRB014	20	2900	20	2900	20	2900	80	11600	80	11600	80	11600
3/8	IRB038	16	2320	16	2320	16	2320	64	9280	64	9280	64	9280
1/2	IRB012	16	2320	16	2320	16	2320	64	9280	64	9280	64	9280
3/4	IRB034	12,5	1813	12,5	1813	12,5	1813	50	7250	45	6525	50	7250
1	IRB0100	10	1450	10	1450	10	1450	40	5800	40	5800	40	5800

* Spillage is an indicative value of the fluid loss during disconnection (according to ISO norm test method).

Different possible configurations

PL version (free flow without valve) available upon request.
SAE thread available upon request.

Temperature range:

Standard seals in FKM (VITON®): from -15°C to +180°C (from +5 °F to +356 °F).
Upon request seals in NBR (Nitrile) from -20 °C to +100 °C (from -4 °F to +212 °F).
Seals in NBR (Nitrile) with water from +5°C to +60°C (from +41°F to +140°F).
Upon request seals in EPDM (Ethylene Propylene): from -40 °C to +150 °C (from -40 °F to +302 °F).
Please read carefully Instructions and warnings for proper selection of the products.

Tests performed:

Qualification tests have been performed with hydraulic oil using couplings with FKM (VITON®) seals.
The max. operating pressure have been verified for 100.000 impulses according to ISO norm test method.

WARNING

A defect, a wrong choice or an improper use of products, can cause injury to persons, animals and objects.
Never connect or disconnect with dynamic pressure (e.g. pump on).
Do not use the coupling disconnected with high impulse pressure.
Do not couple-uncouple with flow and/or pressure in the circuit.
Do not couple-uncouple when the temperature inside of the circuit is higher than 80 °C (176 °F).
Do not use with fluids below the freezing point to avoid damages due to ice expansion and consequential extrusion of the valving.
Check the maximum allowable working pressure of the port in use.
Make sure that the medium used is compatible with seal and material as indicated for each series.
In case of doubt please contact Stucchi Technical Support.
The interchangeability is mentioned under the assumption that the manufacturer of the considered products has not changed any dimension.
It is mandatory to carefully read and closely follow the instructions before selecting or using any Stucchi products.
Always refer to the version uploaded in the Instructions and warning section of stucchigroup.com website for the latest release.
For specific, product-related, instructions, please contact Stucchi technical service.

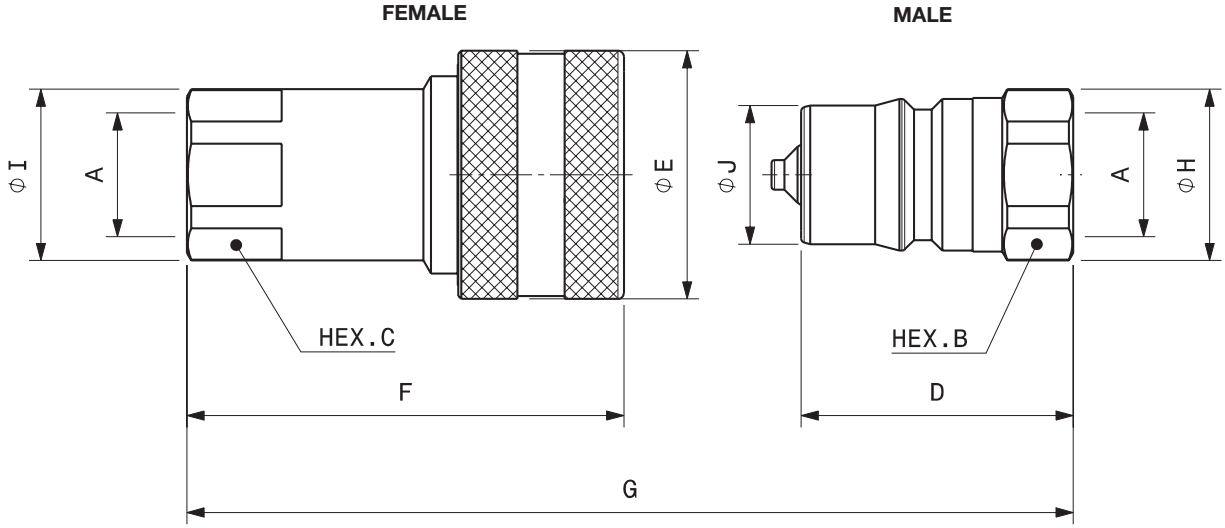

Port description: FEMALE THREAD BSPP (ISO 1179-1)

BODY SIZE	Descriptive Code	Item Code		ISO DN	PORT (A)	Overall Length			Length			Hex			Overall Diameter			Body Diameter			Weight	
							mm	in		mm	in		mm	in		mm	in		mm	in	kg	lb
1/8"	F IRBO18V BSP	Female	804500100	5,0	1/8"	G	60,5	2,38	F	48,8	1,92	C	14,0	0,55	I	15,8	0,62	E	23,0	0,91	0,07	0,15
	M IRBO18V BSP	Male	804500101						D	30,0	1,18	B	14,0	0,55	H	15,8	0,62	J	10,8	0,43	0,02	0,04
1/4"	F IRBO14V BSP	Female	804500102	6,3	1/4"	G	70,7	2,78	F	57,0	2,24	C	19,0	0,75	I	21,2	0,83	E	27,0	1,06	0,13	0,29
	M IRBO14V BSP	Male	804500103						D	35,0	1,38	B	19,0	0,75	H	20,8	0,82	J	14,2	0,56	0,04	0,08
3/8"	F IRBO38V BSP	Female	804500104	10,0	3/8"	G	82,7	3,26	F	66,0	2,60	C	24,0	0,94	I	27,0	1,06	E	34,0	1,34	0,24	0,52
	M IRBO38V BSP	Male	804500105						D	41,0	1,61	B	24,0	0,94	H	26,0	1,02	J	19,1	0,75	0,07	0,16
1/2"	F IRBO12V BSP	Female	804500106	12,5	1/2"	G	92,6	3,65	F	73,9	2,91	C	27,0	1,06	I	29,0	1,14	E	42,0	1,65	0,34	0,76
	M IRBO12V BSP	Male	804500107						D	46,0	1,81	B	27,0	1,06	H	29,0	1,14	J	23,5	0,93	0,11	0,24
3/4"	F IRBO34V BSP	Female	804500108	20,0	3/4"	G	111,1	4,37	F	90,1	3,55	C	36,0	1,42	I	38,5	1,52	E	50,0	1,97	0,61	1,33
	M IRBO34V BSP	Male	804500109						D	55,0	2,17	B	36,0	1,42	H	38,5	1,52	J	31,4	1,24	0,22	0,48
1"	F IRBO100V BSP	Female	804500110	25,0	1"	G	133,2	5,24	F	106,2	4,18	C	41,0	1,61	I	44,8	1,76	E	60,0	2,36	0,93	2,04
	M IRBO100V BSP	Male	804500111						D	66,0	2,60	B	41,0	1,61	H	44,8	1,76	J	37,7	1,48	0,35	0,78

Port description: FEMALE THREAD NPT (ANSI B.1.20.1)

BODY SIZE	Descriptive Code	Item Code		ISO DN	PORT (A)	Overall Length			Length			Hex			Overall Diameter			Body Diameter			Weight	
							mm	in		mm	in		mm	in		mm	in		mm	in	kg	lb
1/8"	F IRBO18V NPT	Female	804501100	5,0	1/8"	G	60,5	2,38	F	48,8	1,92	C	14,0	0,55	I	15,8	0,62	E	23,0	0,91	0,08	0,17
	M IRBO18V NPT	Male	804501101						D	30,0	1,18	B	14,0	0,55	H	15,8	0,62	J	10,8	0,43	0,02	0,04
1/4"	F IRBO14V NPT	Female	804501102	6,3	1/4"	G	70,7	2,78	F	57,0	2,24	C	19,0	0,75	I	21,2	0,83	E	27,0	1,06	0,13	0,29
	M IRBO14V NPT	Male	804501103						D	35,0	1,38	B	19,0	0,75	H	20,8	0,82	J	14,2	0,56	0,04	0,09
3/8"	F IRBO38V NPT	Female	804501104	10,0	3/8"	G	82,7	3,26	F	66,0	2,60	C	24,0	0,94	I	27,0	1,06	E	34,0	1,34	0,23	0,51
	M IRBO38V NPT	Male	804501105						D	41,0	1,61	B	24,0	0,94	H	26,0	1,02	J	19,1	0,75	0,08	0,17
1/2"	F IRBO12V NPT	Female	804501106	12,5	1/2"	G	92,6	3,65	F	73,9	2,91	C	27,0	1,06	I	29,0	1,14	E	42,0	1,65	0,35	0,76
	M IRBO12V NPT	Male	804501107						D	46,0	1,81	B	27,0	1,06	H	29,0	1,14	J	23,5	0,93	0,12	0,25
3/4"	F IRBO34V NPT	Female	804501108	20,0	3/4"	G	111,1	4,37	F	90,1	3,55	C	36,0	1,42	I	38,5	1,52	E	50,0	1,97	0,61	1,33
	M IRBO34V NPT	Male	804501109						D	55,0	2,17	B	36,0	1,42	H	38,5	1,52	J	31,4	1,24	0,22	0,49
1"	F IRBO100V NPT	Female	804501110	25,0	1"	G	133,2	5,24	F	106,2	4,18	C	41,0	1,61	I	44,8	1,76	E	60,0	2,36	0,94	2,07
	M IRBO100V NPT	Male	804501111						D	66,0	2,60	B	41,0	1,61	H	44,8	1,76	J	37,7	1,48	0,36	0,79

SPARE KIT SEAL FOR FEMALE

Repair kit / OR+BK		
Body Size	Description	Part Number
1/8”	F IRBO18	815700214
1/4”	F IRBO14	815700216
3/8”	F IRBO38	815700218
1/2”	F IRBO12	815700220
3/4”	F IRBO34	815700222
1”	F IRBO100	815700224

O-Ring in FKM (VITON®)
BackUp in Teflon®

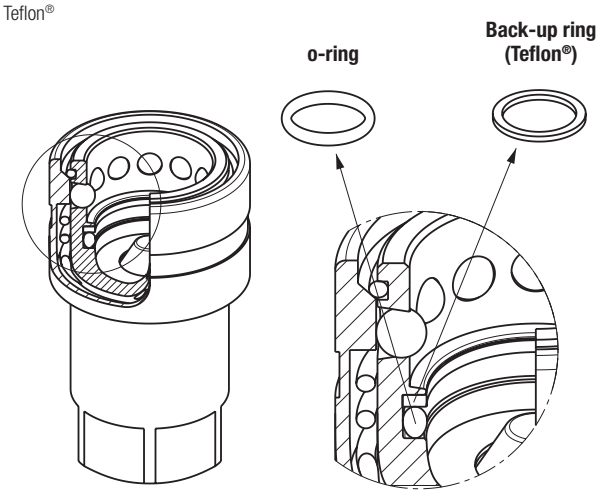

PROTECTIVE CAPS FOR IRBO SERIES

Protective caps are always recommended to protect the couplings from damage, dirt inclusion, and will increase the product life. The protective caps for IRBO series are manufactured in plastic with connection lanyard (standard color red, other colors available upon request).

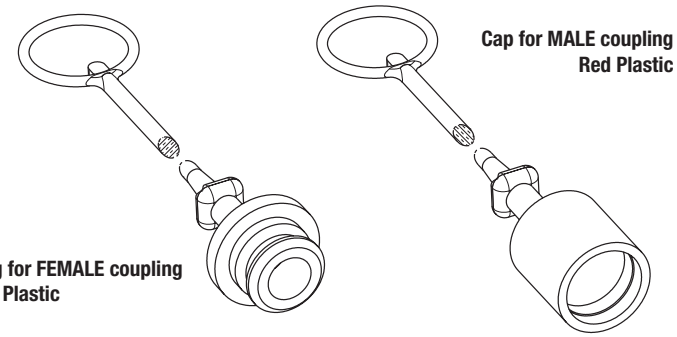

Protective Cap				
Body Size/Description		Part Number		Material/Color
		Plug for Female	Cap for Male	
1/4”	IRBO14	815000032	815000033	Plastic/Red
3/8”	IRBO38	815000034	815000035	Plastic/Red
1/2”	IRBO12	815000036	815000037	Plastic/Red
3/4”	IRBO34	815000038	815000039	Plastic/Red
1”	IRBO100	815000040	815000041	Plastic/Red

STUCCHI Quick Couplings Catalog - December 2024 - All right reserved.
Texts, data and illustrations mentioned in this catalogue may be changed by Stucchi at any time, without notice; always refer to the version uploaded on the English version of stucchigroup.com/en website for the latest release. In case of doubt, please contact Stucchi technical service.

IRBXSERIES

INTERCHANGE > **ISO 7241 B**

Stucchi®

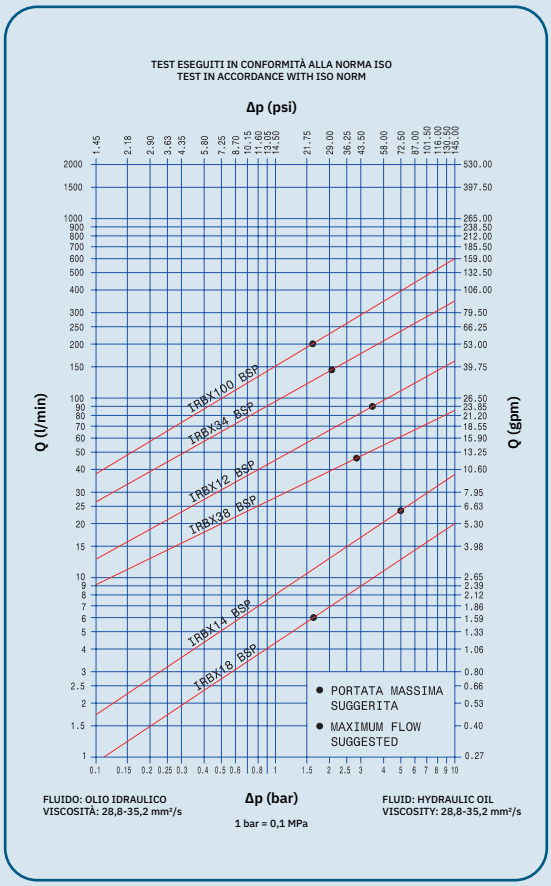

TECHNICAL FEATURES AND OPTIONS

Interchange
ISO 7241 B

Sealing description
FKM (VITON®)

Connection system
Single acting sleeve

Available sizes
From 1/8" to 1"

Material
Stainless steel (AISI 316L)
Retainer in brass

Available threads
BSP - NPT

Operating pressure
Up to 250 bar

Locking mechanism
Locking Ball system

Flow rate
Up to 200 l/min

Temperature (°C)
Different seals with a range of -40°C / +180°C

Valving style
Poppet

Connection under pressure
Connection: not allowed
Disconnection: not allowed

BENEFITS

- The poppet valve with elastomer seal provides maximum sealing of the couplings when disconnected.
- Shape of internal parts is designed to reduce turbulence and pressure drop.
- Good corrosion resistance.
- Compact slim design.
- Simple to use.

HOW TO USE

- Before to connect, clean the mating surface of the couplings to avoid dirt inclusion in the circuit.
- To connect pull back the sleeve of the female coupling, align the female with the male coupling and push one into the other until both halves are fully connected and release the sleeve.
- To disconnect push back the sleeve of the female coupling, pull out the mating half.

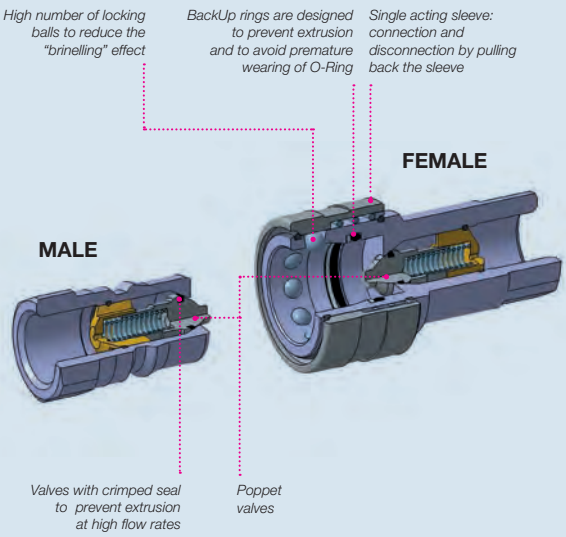

MAIN APPLICATIONS

Stucchi®

PERFORMANCES

Size		Series/Size	Max. flow suggested		Connect force		Disconnect force		Spillage*
in	mm (ISO)		l/min	gpm	N	lbf	N	lbf	ml
1/8	5,0	IRBX18	6	1,59	75	16,88	35	7,88	0,18
1/4	6,3	IRBX14	24	6,36	60	13,50	30	6,75	0,33
3/8	10,0	IRBX38	46	12,19	90	20,25	35	7,88	2,20
1/2	12,5	IRBX12	90	23,85	125	28,13	45	10,13	3,00
3/4	19,0	IRBX34	148	39,22	135	30,38	55	12,38	9,40
1	25,0	IRBX100	200	53,00	140	31,50	40	9,00	14,00

Size	Series/Size	Max. operating pressure						Burst pressure					
		Coupled		Male		Female		Coupled		Male		Female	
in		MPa	psi	MPa	psi	MPa	psi	MPa	psi	MPa	psi	MPa	psi
1/8	IRBX18	25	3625	25	3625	25	3625	100	14500	100	14500	100	14500
1/4	IRBX14	25	3625	25	3625	25	3625	100	14500	100	14500	100	14500
3/8	IRBX38	20	2900	20	2900	20	2900	80	11600	80	11600	80	11600
1/2	IRBX12	20	2900	20	2900	20	2900	80	11600	80	11600	80	11600
3/4	IRBX34	16	2320	16	2320	16	2320	64	9280	48	6960	64	9280
1	IRBX100	12,5	1813	12,5	1813	12,5	1813	50	7250	50	7250	50	7250

* Spillage is an indicative value of the fluid loss during disconnection (according to ISO norm test method).

Different possible configurations:
PL version (free flow without valve) available upon request.
IRBX-X internal retainer in stainless steel available upon request.
SAE thread available upon request.

Temperature range:
Standard seals in FKM (VITON®): from -15°C to +180°C (from +5 °F to +356 °F).
Please read carefully Instructions and warnings for proper selection of the products.
Upon request seals in NBR (Nitrile): from -20 °C to +100 °C (from -4 °F to +212 °F).
Seals in NBR (Nitrile) with water from +5°C to +60°C (from +41°F to +140°F).
Upon request seals in EPDM (Ethylene Propylene): from -40 °C to +150 °C (from -40 °F to +302 °F).

Material:
- Construction: Stainless steel AISI 316L
- Springs: AISI 302
- Locking ball: AISI 316

Tests performed:
Qualification tests have been performed with hydraulic oil using couplings with FKM (VITON®) seals.
The max. operating pressure have been verified for 100.000 impulses according to ISO norm test method.

⚠ WARNING

A defect, a wrong choice or an improper use of products, can cause injury to persons, animals and objects.
Never connect or disconnect with dynamic pressure (e.g. pump on).
Do not use the coupling disconnected with high impulse pressure.
Do not couple-uncouple with flow and/or pressure in the circuit.
Do not couple-uncouple when the temperature inside of the circuit is higher than 80 °C (176 °F).
Do not use with fluids below the freezing point to avoid damages due to ice expansion and consequential extrusion of the valving.
Check the maximum allowable working pressure of the port in use.
Make sure that the medium used is compatible with seal and material as indicated for each series.
In case of doubt please contact Stucchi Technical Support.
The interchangeability is mentioned under the assumption that the manufacturer of the considered products has not changed any dimension.
It is mandatory to carefully read and closely follow the instructions before selecting or using any Stucchi products.
Always refer to the version uploaded in the Instructions and warning section of stucchigroup.com website for the latest release.
For specific, product-related, instructions, please contact Stucchi technical service.

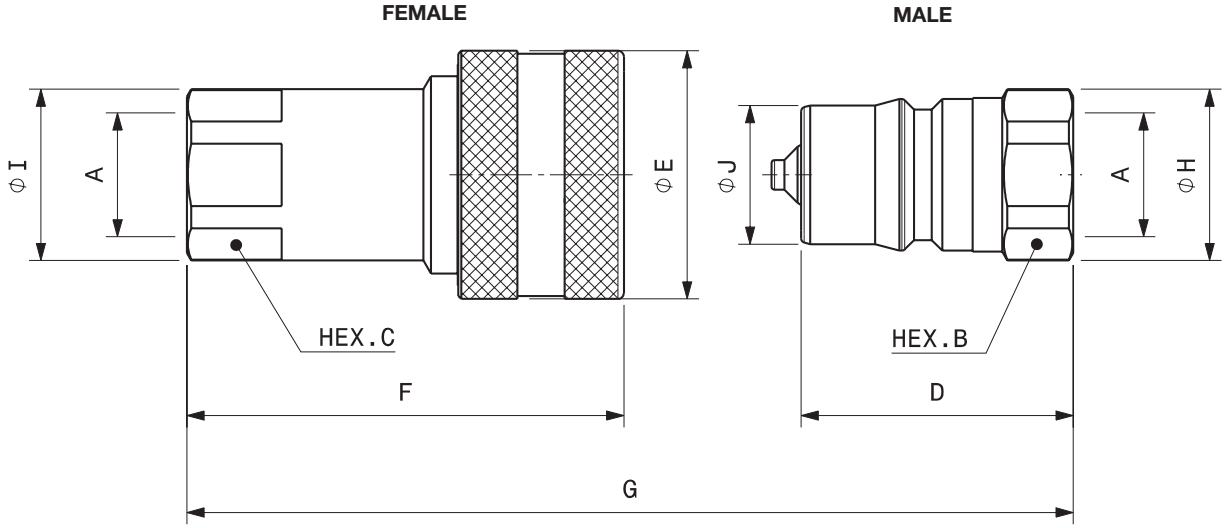

Port description: FEMALE THREAD BSPP (ISO 1179-1)

BODY SIZE	Descriptive Code	Item Code		ISO DN	PORT (A)	Overall Length			Length			Hex			Overall Diameter			Body Diameter			Weight	
							mm	in		mm	in		mm	in		mm	in		mm	in	kg	lb
1/8"	F IRBX18 BSP	Female	804600100	5,0	1/8"	G	60,5	2,38	F	48,8	1,92	C	14,0	0,55	I	15,8	0,62	E	23,0	0,91	0,07	0,15
	M IRBX18 BSP	Male	804600101						D	30,0	1,18	B	14,0	0,55	H	15,8	0,62	J	10,8	0,43	0,02	0,04
1/4"	F IRBX14 BSP	Female	804600102	6,3	1/4"	G	70,7	2,78	F	57,0	2,24	C	19,0	0,75	I	21,2	0,83	E	27,0	1,06	0,12	0,27
	M IRBX14 BSP	Male	804600103						D	35,0	1,38	B	19,0	0,75	H	20,8	0,82	J	14,2	0,56	0,04	0,08
3/8"	F IRBX38 BSP	Female	804600104	10,0	3/8"	G	82,7	3,26	F	66,0	2,60	C	24,0	0,94	I	27,0	1,06	E	34,0	1,34	0,23	0,50
	M IRBX38 BSP	Male	804600105						D	41,0	1,61	B	24,0	0,94	H	26,0	1,02	J	19,1	0,75	0,07	0,15
1/2"	F IRBX12 BSP	Female	804600106	12,5	1/2"	G	92,6	3,65	F	73,9	2,91	C	27,0	1,06	I	29,0	1,14	E	42,0	1,65	0,33	0,72
	M IRBX12 BSP	Male	804600107						D	46,0	1,81	B	27,0	1,06	H	29,0	1,14	J	23,5	0,93	0,10	0,23
3/4"	F IRBX34 BSP	Female	804600108	19,0	3/4"	G	111,1	4,37	F	90,1	3,55	C	36,0	1,42	I	38,5	1,52	E	50,0	1,97	0,58	1,27
	M IRBX34 BSP	Male	804600109						D	55,0	2,17	B	36,0	1,42	H	38,5	1,52	J	31,4	1,24	0,21	0,45
1"	F IRBX100 BSP	Female	804600110	25,0	1"	G	133,2	5,24	F	106,2	4,18	C	41,0	1,61	I	44,8	1,76	E	60,0	2,36	0,88	1,94
	M IRBX100 BSP	Male	804600111						D	66,0	2,60	B	41,0	1,61	H	44,8	1,76	J	37,7	1,48	0,34	0,74

Port description: FEMALE THREAD NPT (ANSI B.1.20.1)

BODY SIZE	Descriptive Code	Item Code		ISO DN	PORT (A)	Overall Length			Length			Hex			Overall Diameter			Body Diameter			Weight	
							mm	in		mm	in		mm	in		mm	in		mm	in	kg	lb
1/8"	F IRBX18 NPT	Female	804601100	5,0	1/8"	G	60,5	2,38	F	48,8	1,92	C	14,0	0,55	I	15,8	0,62	E	23,0	0,91	0,07	0,15
	M IRBX18 NPT	Male	804601101						D	30,0	1,18	B	14,0	0,55	H	15,8	0,62	J	10,8	0,43	0,02	0,04
1/4"	F IRBX14 NPT	Female	804601102	6,3	1/4"	G	70,7	2,78	F	57,0	2,24	C	19,0	0,75	I	21,2	0,83	E	27,0	1,06	0,12	0,27
	M IRBX14 NPT	Male	804601103						D	35,0	1,38	B	19,0	0,75	H	20,8	0,82	J	14,2	0,56	0,04	0,08
3/8"	F IRBX38 NPT	Female	804601104	10,0	3/8"	G	82,7	3,26	F	66,0	2,60	C	24,0	0,94	I	27,0	1,06	E	34,0	1,34	0,23	0,50
	M IRBX38 NPT	Male	804601105						D	41,0	1,61	B	24,0	0,94	H	26,0	1,02	J	19,1	0,75	0,07	0,15
1/2"	F IRBX12 NPT	Female	804601106	12,5	1/2"	G	92,6	3,65	F	73,9	2,91	C	27,0	1,06	I	29,0	1,14	E	42,0	1,65	0,33	0,72
	M IRBX12 NPT	Male	804601107						D	46,0	1,81	B	27,0	1,06	H	29,0	1,14	J	23,5	0,93	0,11	0,24
3/4"	F IRBX34 NPT	Female	804601108	19,0	3/4"	G	111,1	4,37	F	90,1	3,55	C	36,0	1,42	I	38,5	1,52	E	50,0	1,97	0,58	1,28
	M IRBX34 NPT	Male	804601109						D	55,0	2,17	B	36,0	1,42	H	38,5	1,52	J	31,4	1,24	0,21	0,46
1"	F IRBX100 NPT	Female	804601110	25,0	1"	G	133,2	5,24	F	106,2	4,18	C	41,0	1,61	I	44,8	1,76	E	60,0	2,36	0,89	1,96
	M IRBX100 NPT	Male	804601111						D	66,0	2,60	B	41,0	1,61	H	44,8	1,76	J	37,7	1,48	0,34	0,74

SPARE KIT SEAL FOR FEMALE

Repair kit / OR+BK		
Body Size	Description	Part Number
1/8”	F IRBX18	815700214
1/4”	F IRBX14	815700216
3/8”	F IRBX38	815700218
1/2”	F IRBX12	815700220
3/4”	F IRBX34	815700222
1”	F IRBX100	815700224

O-Ring in FKM (VITON®)
BackUp in Teflon®

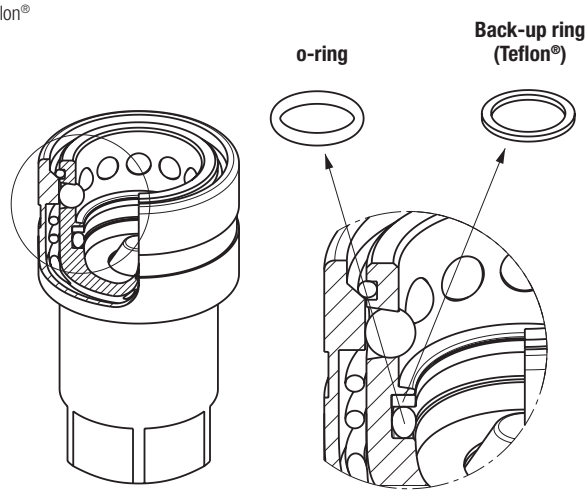

PROTECTIVE CAPS FOR IRBX SERIES

Protective caps are always recommended to protect the couplings from damage, dirt inclusion, and will increase the product life. The protective caps for IRBX series are manufactured in plastic with connection lanyard (standard color red, other colors available upon request).

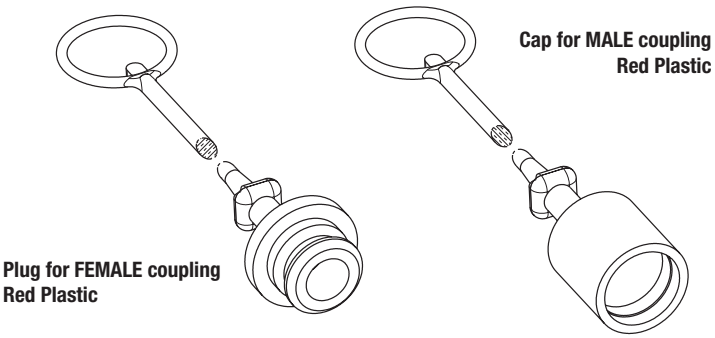

Protective Cap				
Body Size/Description		Part Number		Material/Color
		Plug for Female	Cap for Male	
1/4”	IRBX14	815000032	815000033	Plastic/Red
3/8”	IRBX38	815000034	815000035	Plastic/Red
1/2”	IRBX12	815000036	815000037	Plastic/Red
3/4”	IRBX34	815000038	815000039	Plastic/Red
1”	IRBX100	815000040	815000041	Plastic/Red

STUCCHI Quick Couplings Catalog - December 2024 - All right reserved.
Texts, data and illustrations mentioned in this catalogue may be changed by Stucchi at any time, without notice; always refer to the version uploaded on the English version of stucchigroup.com/en website for the latest release. In case of doubt, please contact Stucchi technical service.

IRCSERIES

INTERCHANGE > **with similar product (Nordic interface)**

TECHNICAL FEATURES AND OPTIONS

Interchange
With similar product (Nordic interface)

Sealing description
Nitrile NBR

Connection system
Single acting sleeve

Available sizes
From 1/4" to 1"

Material /treatment
Carbon steel ZnNi

Available threads
BSP - NPT - SAE

Operating pressure
Up to 450 bar

Locking mechanism
Ball locking + safety sleeve

Flow rate
Up to 378 l/min

Temperature (°C)
-20°C / +100°C

Valving style
Poppet

Connection under pressure
Only PC version
Connection: one side
Disconnection: not allowed

BENEFITS

- Connection under residual pressure is allowed in the male or in the female (PC version). Please notice that the counterpart side should be drained and should use a standard poppet half.
- The poppet valve with elastomer seal provides maximum sealing of the couplings once disconnected.
- O-Ring + BackUp ring for optimum protection sealing.
- The Zinc Nickel plating ensures high resistance to corrosion and it is ideal for hydraulic equipment applications where an improved corrosion resistance is necessary.
- Additional O-Ring for extra sealing capacity and to contain spray effect to avoid soil contamination.
- High durability.
- Reference products for tough applications, typically used in Nordic countries.
- Safety sleeve to prevent accidental disconnection.
- Shape of internal parts is optimized to reduce turbulence and pressure drop.
- High resistance to pressure impulses.
- Compact design.
- Simple to use.

HOW TO USE

- Before to connect, clean the mating surface of the couplings to avoid dirt inclusion in the circuit.
- To connect: pull back the sleeve of the female coupling, align the female with the male coupling and push one into the other until both halves are fully connected and release the sleeve.
- To avoid accidental disconnection rotate safety sleeve.
- To disconnect: unlock the safety sleeve and pull back the sleeve of the female coupling, pull out the mating half.

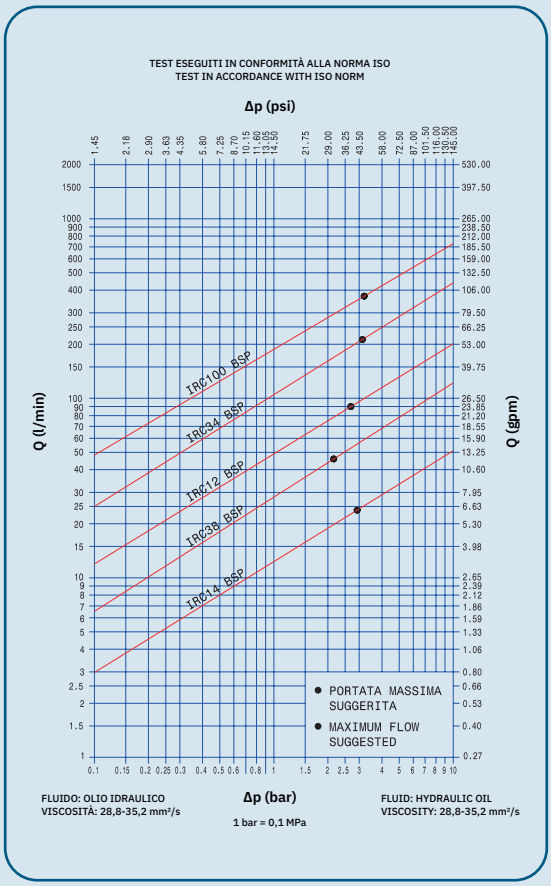

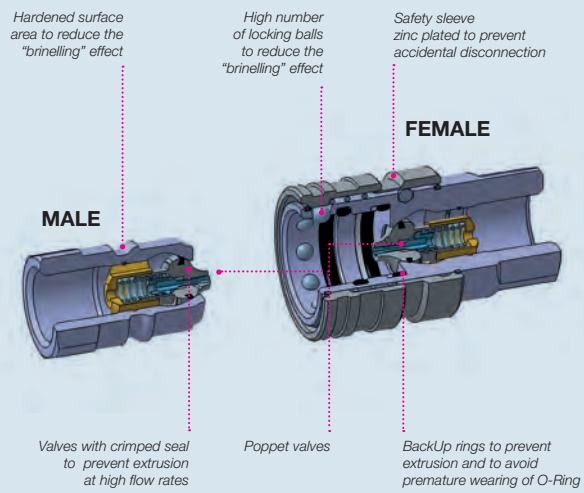

This image represents PC version (release pressure device system)

MAIN APPLICATIONS

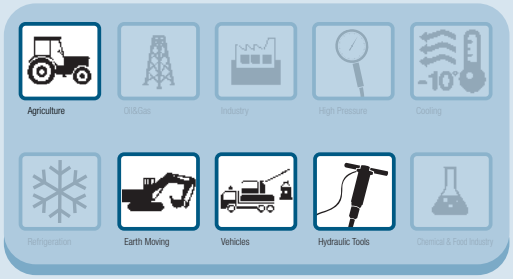

Stucchi®

PERFORMANCES

Size		Series/Size	Max. flow suggested		Connect force		Disconnect force		Spillage*
in	mm		l/min	gpm	N	lbf	N	lbf	ml
1/4	6.3	IRC14	24	6,36	60	13,49	30	6,74	1,1
3/8	10	IRC38	46	12,19	90	20,23	35	7,87	2,5
1/2	12,5	IRC12	90	23,85	120	26,98	35	7,87	3,5
3/4	20	IRC34	212	56,18	170	38,22	45	10,12	15
1	25	IRC100**	378	100,17	210	47,21	45	10,12	18

Size	Series/Size	Max. operating pressure						Burst pressure					
		Coupled		Male		Female		Coupled		Male		Female	
in	Steel	MPa	psi	MPa	psi	MPa	psi	MPa	psi	MPa	psi	MPa	psi
1/4	IRC14	45	6525	30	4350	30	4350	180	26100	120	17400	120	17400
3/8	IRC38	35	5075	28	4060	28	4060	130	18850	110	15950	110	15950
1/2	IRC12	33	4785	25	3625	25	3625	110	15950	100	14500	100	14500
3/4	IRC34	33	4785	25	3625	25	3625	100	14500	80	11600	80	11600
1	IRC100**	33	4785	25	3625	25	3625	100	14500	100	14500	100	14500

* Spillage is an indicative value of the fluid loss during disconnection (according to ISO norm test method).

** Specific dimensions of Stucchi IRC series are certified with Lloyd Type Approval in accordance with API 16D at specific rating pressure of 207 bar/3000 PSI. For complete technical information please contact Stucchi Technical Support.

Different possible configurations:
PC version, connectable under residual pressure.
PL version, free flow.
SAE thread available upon request.

For complete technical information please contact Stucchi Technical Support.

Temperature range:
Seals in NBR (Nitrile): from -20 °C to +100 °C (from -4 °F to +212 °F).
Upon request seals in FKM (VITON®): from -15°C to +180°C (from +5 °F to +356 °F).
Please read carefully Instructions and warnings for proper selection of the products.

Tests performed:
Qualification tests have been performed with hydraulic oil using couplings with FKM (VITON®) seals.
The max. operating pressure have been verified for 200.000 impulses in coupled position and 100.000 impulses in uncoupled position according to ISO norm test method.

PC version

1

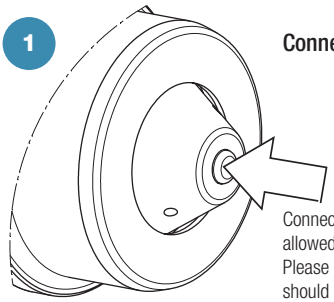

Connect the counter part

Connection under residual pressure is allowed in the male or in the female. Please notice that the counterpart side should be drained and should use a standard poppet half.

2

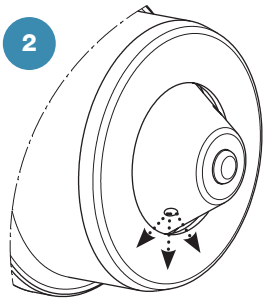

The residual pressure released by the small holes during connection

WARNING

A defect, a wrong choice or an improper use of products, can cause injury to persons, animals and objects.
Connect under pressure products (PC version) are suitable to be connected under residual (static) pressure.
Never connect or disconnect with dynamic pressure (e.g. pump on).
Do not couple-uncouple with flow and pressure in the circuit (except PC version).
Do not couple-uncouple when the temperature inside of the circuit is higher than 80 °C (176 °F).
Do not use the coupling disconnected with high impulse pressure.
Check the maximum allowable working pressure of the port in use.
Make sure that the medium used is compatible with seal and material as indicated for each series.
In case of doubt please contact Stucchi Technical Support.
The interchangeability is mentioned under the assumption that the manufacturer of the considered products has not changed any dimension.
It is mandatory to carefully read and closely follow the instructions before selecting or using any Stucchi products.
Always refer to the version uploaded in the Instructions and warning section of stucchigroup.com website for the latest release.
For specific, product-related, instructions, please contact Stucchi technical service.

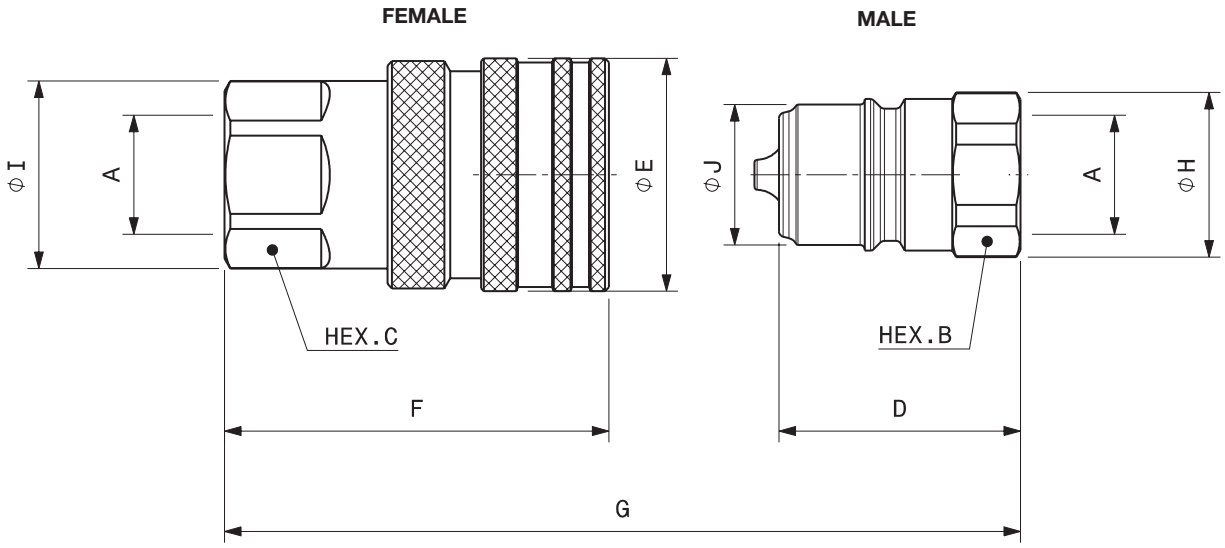

Port description: FEMALE THREAD BSPP (ISO 1179-1)

BODY SIZE	Descriptive Code	Item Code		PORT (A)	Overall Length			Length			Hex			Diameter			Diameter			Weight	
						mm	in		mm	in		mm	in		mm	in		mm	in	kg	lb
1/4"	F IRC14 BSP	Female	812100000	1/4"	G	81,7	3,22	F	60,0	2,36	C	21,0	0,83	I	21,0	0,83	E	26,0	1,02	0,15	0,32
	M IRC14 BSP	Male	812100001					D	48,2	1,90	B	19,0	0,75	H	21,0	0,83	J	12,0	0,47	0,05	0,11
3/8"	F IRC38 BSP	Female	812100002	3/8"	G	76,4	3,01	F	61,6	2,43	C	24,0	0,94	I	26,0	1,02	E	35,0	1,38	0,22	0,48
	M IRC38 BSP	Male	812100003					D	38,0	1,50	B	22,0	0,87	H	24,0	0,94	J	19,9	0,78	0,06	0,12
1/2"	F IRC12 BSP	Female	812100004	1/2"	G	85,2	3,35	F	67,6	2,66	C	30,0	1,18	I	33,0	1,30	E	41,0	1,61	0,33	0,72
	M IRC12 BSP	Male	812100005					D	42,5	1,67	B	27,0	1,06	H	29,0	1,14	J	24,7	0,97	0,10	0,21
3/4"	F IRC34 BSP	Female	812100006	3/4"	G	94,6	3,72	F	76,2	3,00	C	38,0	1,50	I	41,6	1,64	E	52,0	2,05	0,58	1,27
	M IRC34 BSP	Male	812100007					D	47,0	1,85	B	36,0	1,42	H	39,0	1,54	J	32,7	1,29	0,19	0,41
1"	F IRC100 BSP	Female	812100008	1"	G	113,4	4,46	F	92,0	3,62	C	45,0	1,77	I	48,0	1,89	E	62,0	2,44	0,97	2,14
	M IRC100 BSP	Male	812100009					D	56,5	2,22	B	45,0	1,77	H	48,0	1,89	J	40,9	1,61	0,35	0,77

Port description: FEMALE THREAD BSPP (ISO 1179-1)

PC version poppet sealing system connectable under pressure

BODY SIZE	Descriptive Code	Item Code		PORT (A)	Overall Length			Length			Hex			Diameter			Diameter			Weight	
						mm	in		mm	in		mm	in		mm	in		mm	in	kg	lb
3/8"	F IRC38PC BSP	Female	812100010	3/8"	G	76,4	3,01	F	61,6	2,43	C	24,0	0,94	I	26,0	1,02	E	35,0	1,38	0,22	0,48
	M IRC38PC BSP	Male	812100011					D	38,0	1,50	B	22,0	0,87	H	24,0	0,94	J	19,9	0,78	0,06	0,12
1/2"	F IRC12PC BSP	Female	812100012	1/2"	G	85,2	3,35	F	67,6	2,66	C	30,0	1,18	I	33,0	1,30	E	41,0	1,61	0,33	0,72
	M IRC12PC BSP	Male	812100013					D	42,5	1,67	B	27,0	1,06	H	29,0	1,14	J	24,7	0,97	0,10	0,21
3/4"	F IRC34PC BSP	Female	812100014	3/4"	G	94,6	3,72	F	76,2	3,00	C	38,0	1,50	I	41,6	1,64	E	52,0	2,05	0,58	1,27
	M IRC34PC BSP	Male	812100015					D	47,0	1,85	B	36,0	1,42	H	39,0	1,54	J	32,7	1,29	0,19	0,41
1"	F IRC100PC BSP	Female	812100016	1"	G	113,4	4,46	F	92,0	3,62	C	45,0	1,77	I	48,0	1,89	E	62,0	2,44	0,97	2,14
	M IRC100PC BSP	Male	812100017					D	56,5	2,22	B	45,0	1,77	H	48,0	1,89	J	40,9	1,61	0,35	0,77

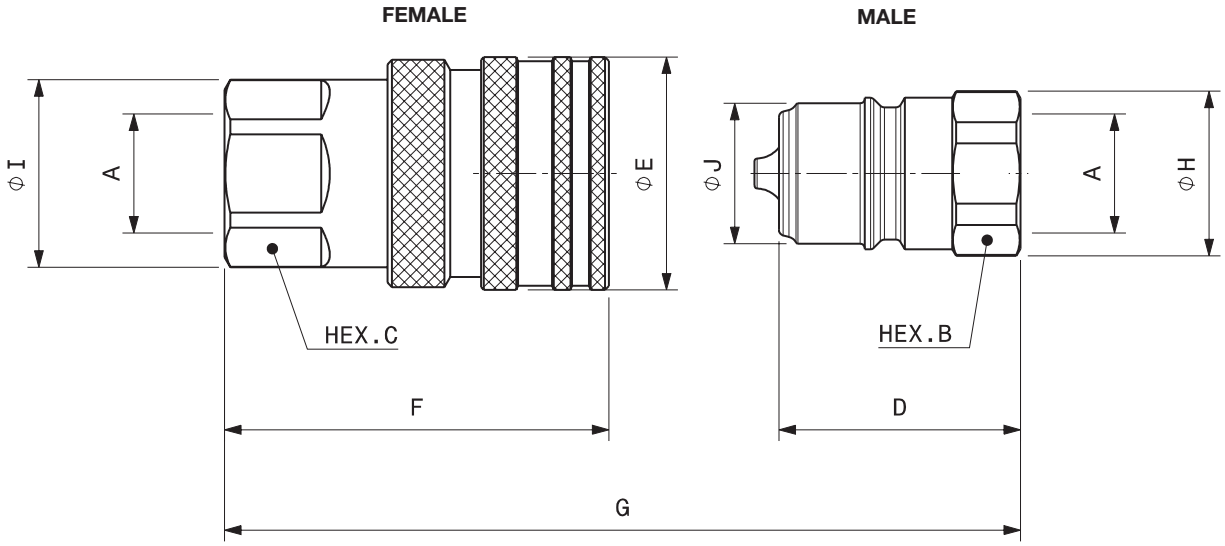

Port description: FEMALE THREAD NPTF (ANSI B.1.20.3)

BODY SIZE	Descriptive Code	Item Code		PORT (A)	Overall Length			Length			Hex			Diameter			Diameter			Weight	
						mm	in		mm	in		mm	in		mm	in		mm	in	kg	lb
1/4"	F IRC14 NPTF	Female	812102000	1/4"	G	81,7	3,22	F	60,0	2,36	C	21,0	0,83	I	21,0	0,83	E	26,0	1,02	0,15	0,32
	M IRC14 NPTF	Male	812102001					D	48,2	1,90	B	19,0	0,75	H	21,0	0,83	J	12,0	0,47	0,05	0,11
3/8"	F IRC38 NPTF	Female	812102002	3/8"	G	76,4	3,01	F	61,6	2,43	C	24,0	0,94	I	26,0	1,02	E	35,0	1,38	0,22	0,49
	M IRC38 NPTF	Male	812102003					D	38,0	1,50	B	22,0	0,87	H	24,0	0,94	J	19,9	0,78	0,06	0,13
1/2"	F IRC12 NPTF	Female	812102004	1/2"	G	85,2	3,35	F	67,6	2,66	C	30,0	1,18	I	33,0	1,30	E	41,0	1,61	0,33	0,72
	M IRC12 NPTF	Male	812102005					D	42,5	1,67	B	27,0	1,06	H	29,0	1,14	J	24,7	0,97	0,10	0,22
3/4"	F IRC34 NPTF	Female	812102006	3/4"	G	94,6	3,72	F	76,2	3,00	C	38,0	1,50	I	41,6	1,64	E	52,0	2,05	0,58	1,27
	M IRC34 NPTF	Male	812102007					D	47,0	1,85	B	36,0	1,42	H	39,0	1,54	J	32,7	1,29	0,19	0,42
1"	F IRC100 NPTF	Female	812102008	1"	G	113,4	4,46	F	92,0	3,62	C	45,0	1,77	I	48,0	1,89	E	62,0	2,44	0,97	2,14
	M IRC100 NPTF	Male	812102009					D	56,5	2,22	B	45,0	1,77	H	48,0	1,89	J	40,9	1,61	0,35	0,78

Port description: FEMALE THREAD NPTF (ANSI B.1.20.3)

PC version poppet sealing system connectable under pressure

BODY SIZE	Descriptive Code	Item Code		PORT (A)	Overall Length			Length			Hex			Diameter			Diameter			Weight	
						mm	in		mm	in		mm	in		mm	in		mm	in	kg	lb
3/8"	F IRC38PC NPTF	Female	812102010*	3/8"	G	76,4	3,01	F	61,6	2,43	C	24,0	0,94	I	26,0	1,02	E	35,0	1,38	0,22	0,49
	M IRC38PC NPTF	Male	812102011*					D	38,0	1,50	B	22,0	0,87	H	24,0	0,94	J	19,9	0,78	0,06	0,13
1/2"	F IRC12PC NPTF	Female	812102012	1/2"	G	85,2	3,35	F	67,6	2,66	C	30,0	1,18	I	33,0	1,30	E	41,0	1,61	0,33	0,72
	M IRC12PC NPTF	Male	812102013					D	42,5	1,67	B	27,0	1,06	H	29,0	1,14	J	24,7	0,97	0,10	0,22
3/4"	F IRC34PC NPTF	Female	812102014	3/4"	G	94,6	3,72	F	76,2	3,00	C	38,0	1,50	I	41,6	1,64	E	52,0	2,05	0,58	1,27
	M IRC34PC NPTF	Male	812102015					D	47,0	1,85	B	36,0	1,42	H	39,0	1,54	J	32,7	1,29	0,19	0,42
1"	F IRC100PC NPTF	Female	812102016	1"	G	113,4	4,46	F	92,0	3,62	C	45,0	1,77	I	48,0	1,89	E	62,0	2,44	0,97	2,14
	M IRC100PC NPTF	Male	812102017					D	56,5	2,22	B	45,0	1,77	H	48,0	1,89	J	40,9	1,61	0,35	0,78

* Available upon request.

SPARE PARTS: SEAL KIT FOR FEMALE

Repair kit / OR+BK		
Body Size	NBR Version Description	Part Number
1/4”	F IRC14	815700700
3/8”	F IRC38	815700702
1/2”	F IRC12	815700704
3/4”	F IRC34	815700706
1”	F IRC100	815700708

BackUp ring in Teflon®

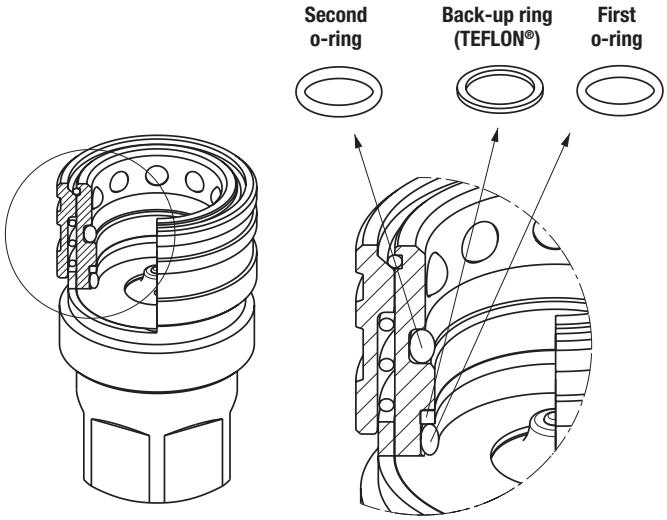

PROTECTIVE CAPS FOR IRC SERIES

Protective caps are always recommended to protect the couplings from damage, dirt inclusion, and will increase the product life. This is particularly important in mobile applications where exposure to weather and aggregate materials are common.
The protective caps for IRC couplings are manufactured in plastic with connection lanyard.

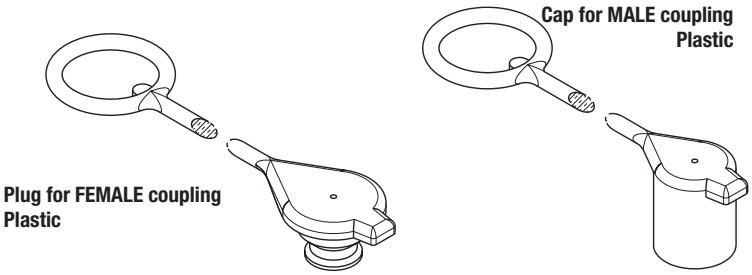

Protective Cap				
Body Size/Description		Part Number		Material/Color
		Plug for Female	Cap for Male	
1/4”	IRC14	815000042	815000043	Plastic/Red
3/8”	IRC38	815000044	815000045	Plastic/Red
1/2”	IRC12	815000046	815000047	Plastic/Red
3/4”	IRC34	815000048	815000049	Plastic/Red
1”	IRC100	815000050	815000051	Plastic/Red

Other colours available upon request.

STUCCHI Quick Couplings Catalog - December 2024 - All right reserved.
Texts, data and illustrations mentioned in this catalogue may be changed by Stucchi at any time, without notice; always refer to the version uploaded on the English version of stucchigroup.com/en website for the latest release. In case of doubt, please contact Stucchi technical service.

IRCXSERIES

INTERCHANGE > **with similar product (Nordic interface)**

Stucchi®

TECHNICAL FEATURES AND OPTIONS

Interchange
With similar product (Nordic interface)

Sealing description
FKM (VITON®)

Connection system
Single acting sleeve

Available sizes
From 1/4" to 1"

Material
Stainless steel (AISI 316L)

Available threads
BSP

Operating pressure
Up to 300 bar

Locking mechanism
Ball locking + safety sleeve

Flow rate
Up to 378 l/min

Temperature (°C)
-15°C / +180°C

Valving style
Poppet

Connection under pressure
Not allowed

BENEFITS

- The poppet valve with elastomer seal provides maximum sealing of the couplings once disconnected.
- O-Ring + BackUp ring for optimum protection sealing.
- Additional O-Ring for extra sealing capacity and to contain spray effect to avoid soil contamination.
- High durability.
- Reference products for tough applications, typically used in Nordic countries.
- Safety sleeve to prevent accidental disconnection.
- Shape of internal parts is optimized to reduce turbulence and pressure drop.
- High resistance to pressure impulses.
- Compact design.
- Simple to use.

HOW TO USE

- Before to connect, clean the mating surface of the couplings to avoid dirt inclusion in the circuit.
- To connect: pull back the sleeve of the female coupling, align the female with the male coupling and push one into the other until both halves are fully connected and release the sleeve.
- To avoid accidental disconnection rotate safety sleeve.
- To disconnect: unlock the safety sleeve and pull back the sleeve of the female coupling, pull out the mating half.

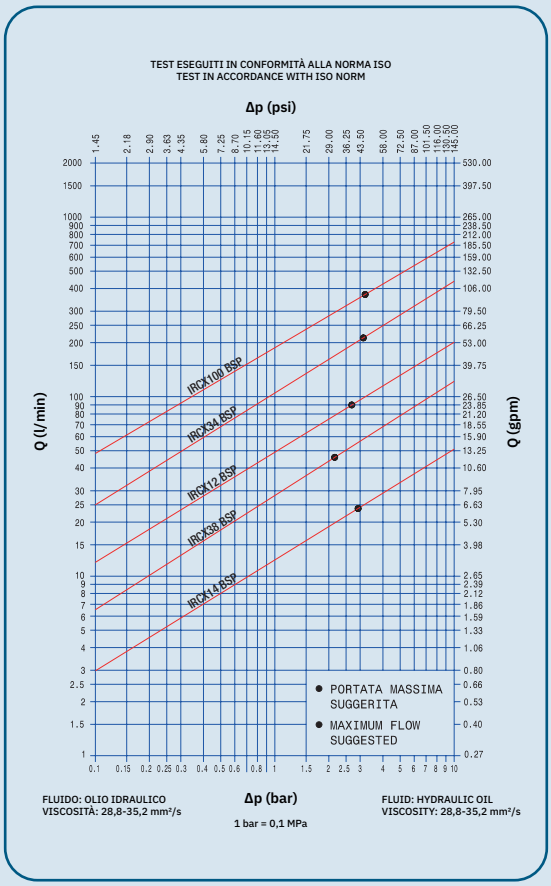

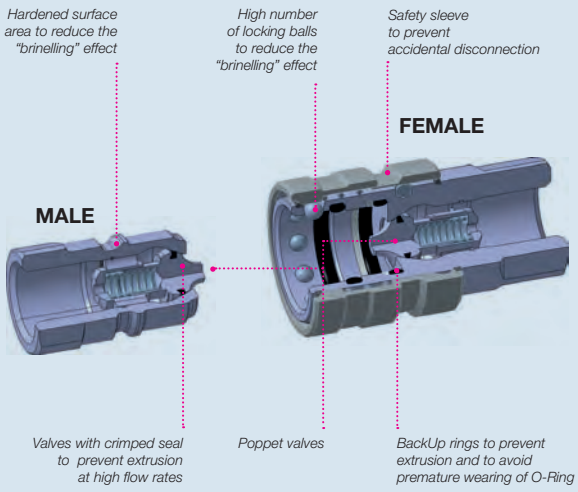

MAIN APPLICATIONS

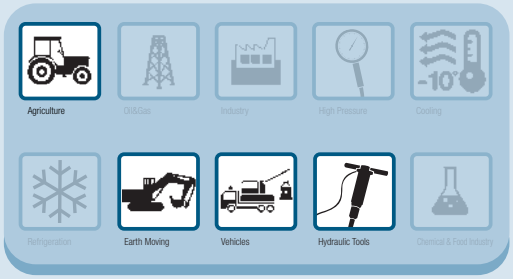

Stucchi®

PERFORMANCES

Size		Series/Size	Max. flow suggested		Connect force		Disconnect force		Spillage*
in	mm		l/min	gpm	N	lbf	N	lbf	ml
1/4	6.3	IRC14	24	6,36	60	13,48	30	6,74	1,1
3/8	10	IRC38	46	12,19	90	20,23	35	7,86	2,5
1/2	12,5	IRC12	90	23,85	120	26,97	35	7,86	3,5
3/4	20	IRC34	212	56,18	170	38,21	45	10,11	15
1	25	IRC100	378	100,17	210	47,20	45	10,11	18

Size	Series/Size	Max. operating pressure						Burst pressure					
		Coupled		Male		Female		Coupled		Male		Female	
in	Stainless steel	MPa	psi	MPa	psi	MPa	psi	MPa	psi	MPa	psi	MPa	psi
1/4	IRC14X	30	4350	30	4350	30	4350	120	17400	120	17400	120	17400
3/8	IRC38X	30	4350	25	3625	25	3625	120	17400	100	14500	100	14500
1/2	IRC12X	30	4350	25	3625	25	3625	120	17400	100	14500	100	14500
3/4	IRC34X	20	2900	20	2900	20	2900	80	11600	60	8700	80	11600
1	IRC100X	20	2900	15	2175	15	2175	80	11600	45	6525	60	8700

* Spillage is an indicative value of the fluid loss during disconnection (according to ISO norm test method).

Material:
- Construction: Stainless steel AISI 316L
- Springs: AISI 302
- Locking ball: AISI 316

Different configuration possible
PL version (free flow without valve): available upon request.
SAE thread available upon request.

Temperature range:
Seals in FKM (VITON®): from -15°C to +180°C (from +5 °F to +356 °F).
Seals in NBR (Nitrile) with water from +5°C to +60°C (from +41°F to +140°F).
Please read carefully Instructions and warnings for proper selection of the products.

Tests performed:
The couplings have been tested according to ISO norm.
The couplings have been tested at max. operating pressure for 200.000 impulses in coupled position and 100.000 impulses in uncoupled position.

⚠ WARNING

A defect, a wrong choice or an improper use of products, can cause injury to persons, animals and objects.
Never connect or disconnect with dynamic pressure (e.g. pump on).
Do not use the coupling disconnected with high impulse pressure.
Do not couple-uncouple with flow and/or pressure in the circuit.
Do not couple-uncouple when the temperature inside of the circuit is higher than 80 °C (176 °F).
Do not use with fluids below the freezing point to avoid damages due to ice expansion and consequential extrusion of the valving.
Check the maximum allowable working pressure of the port in use.
Make sure that the medium used is compatible with seal and material as indicated for each series.
In case of doubt please contact Stucchi Technical Support.
The interchangeability is mentioned under the assumption that the manufacturer of the considered products has not changed any dimension.
It is mandatory to carefully read and closely follow the instructions before selecting or using any Stucchi products.
Always refer to the version uploaded in the Instructions and warning section of stucchigroup.com website for the latest release.
For specific, product-related, instructions, please contact Stucchi technical service.

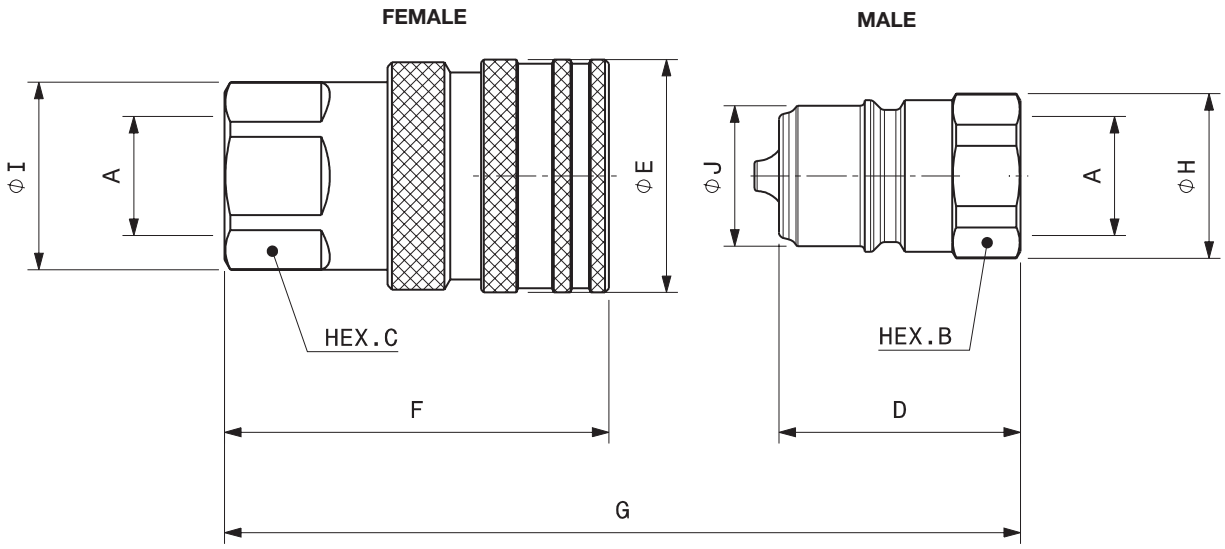

Port description: FEMALE THREAD BSPP (ISO 1179-1 & DIN 3852-2 form X)

BODY SIZE	Descriptive Code	Item Code		PORT (A)	Overall Length			Length			Hex			Diameter			Diameter			Weight	
						mm	in		mm	in		mm	in		mm	in		mm	in	kg	lb
1/4"	F IRC14X BSP	Female	808900100	1/4"	G	81,7	3,22	F	61,6	2,36	C	24,0	0,83	I	23,0	0,83	E	26,0	1,02	0,15	0,32
	M IRC14X BSP	Male	808900101					D	38,0	1,90	B	22,0	0,75	H	24,5	0,83	J	12,0	0,47	0,05	0,11
3/8"	F IRC38X BSP	Female	808900102	3/8"	G	76,4	3,01	F	67,6	2,43	C	30,0	0,94	I	26,0	1,02	E	35,0	1,38	0,22	0,48
	M IRC38X BSP	Male	808900103					D	42,5	1,50	B	27,0	0,87	H	24,0	0,94	J	19,9	0,78	0,06	0,12
1/2"	F IRC12X BSP	Female	808900104	1/2"	G	85,2	3,35	F	76,2	2,66	C	38,0	1,18	I	33,0	1,30	E	41,0	1,61	0,33	0,72
	M IRC12X BSP	Male	808900105					D	47,0	1,67	B	36,0	1,06	H	29,0	1,14	J	24,7	0,97	0,10	0,21
3/4"	F IRC34X BSP	Female	808900106	3/4"	G	94,6	3,72	F	92,0	3,00	C	45,0	1,50	I	41,6	1,64	E	52,0	2,05	0,58	1,27
	M IRC34X BSP	Male	808900107					D	56,5	1,85	B	45,0	1,42	H	39,0	1,54	J	32,7	1,29	0,19	0,41
1"	F IRC100X BSP	Female	808900108	1"	G	113,4	4,46	F	92,0	3,62	C	45,0	1,77	I	48,0	1,89	E	62,0	2,44	0,97	2,14
	M IRC100X BSP	Male	808900109					D	56,5	2,22	B	45,0	1,77	H	48,0	1,89	J	40,9	1,61	0,35	0,77

SPARE PARTS: SEAL KIT FOR FEMALE

Repair kit / OR+BK		
Body Size	VITON Version Description	Part Number
1/4”	F IRC14X	815700978
3/8”	F IRC38X	815700980
1/2”	F IRC12X	815700982
3/4”	F IRC34X	815700984
1”	F IRC100X	815700986

BackUp ring in Teflon®

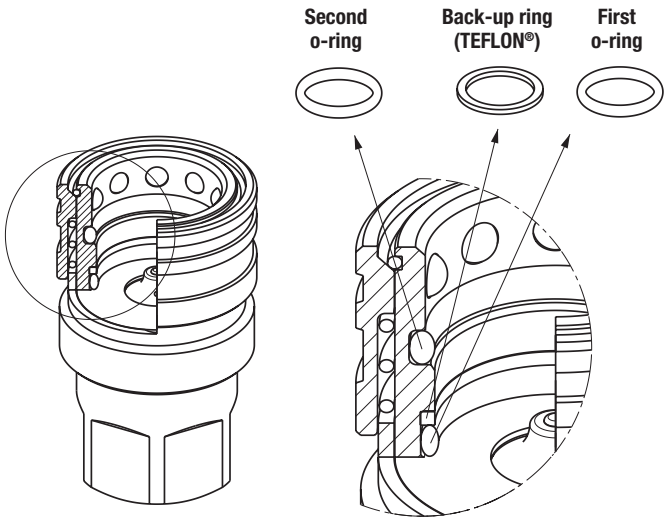

PROTECTIVE CAPS FOR IRC SERIES

Protective caps are always recommended to protect the couplings from damage, dirt inclusion, and will increase the product life. This is particularly important in mobile applications where exposure to weather and aggregate materials are common.
The protective caps for IRC couplings are manufactured in plastic with connection lanyard.

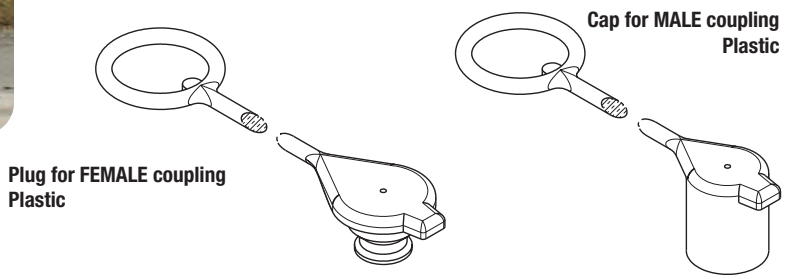

Protective Cap				
Body Size/Description		Part Number		Material/Color
		Plug for Female	Cap for Male	
1/4”	IRC14	815000042	815000043	Plastic/Red
3/8”	IRC38	815000044	815000045	Plastic/Red
1/2”	IRC12	815000046	815000047	Plastic/Red
3/4”	IRC34	815000048	815000049	Plastic/Red
1”	IRC100	815000050	815000051	Plastic/Red

Other colours available upon request.

STUCCHI Quick Couplings Catalog - December 2024 - All right reserved.
Texts, data and illustrations mentioned in this catalogue may be changed by Stucchi at any time, without notice; always refer to the version uploaded on the English version of stucchigroup.com/en website for the latest release. In case of doubt, please contact Stucchi technical service.

IFRSERIES

INTERCHANGE > **ISO 5676 “NF U 16-006”**

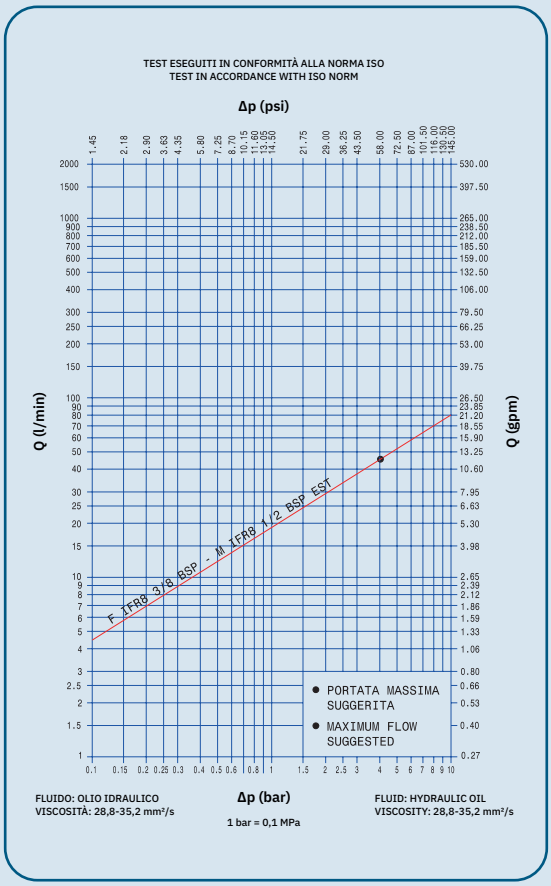

TECHNICAL FEATURES AND OPTIONS

Interchange
ISO 5676
“NF U 16-006”

Sealing description
Nitrile NBR

Connection system
Single acting sleeve

Available sizes
3/8”

Material /treatment
Carbon steel /Cr3

Available threads
BSP - METRIC

Operating pressure
Up to 150 bar

Locking mechanism
Locking Ball system

Flow rate
Up to 46 l/min

Temperature (°C)
-20°C / +100°C

Valving style
Flat face
Non spill

Connection under pressure
Connection: not allowed
Disconnection: not allowed

BENEFITS

- Minimal fluid spillage during disconnection, reducing fluid spillage to the environment.
- Minimal air inclusion during connection.
- Compact slim design.
- Simple to use.
- Metallic plug for female and plastic cap for male are included with the couplings.

HOW TO USE

- Before to connect, clean the mating surface of the couplings to avoid dirt inclusion in the circuit.
- To connect pull back the sleeve of the female coupling, align the female with the male coupling and push one into the other until both halves are fully connected and release the sleeve.
- To disconnect push back the sleeve of the female coupling, pull out the mating half.

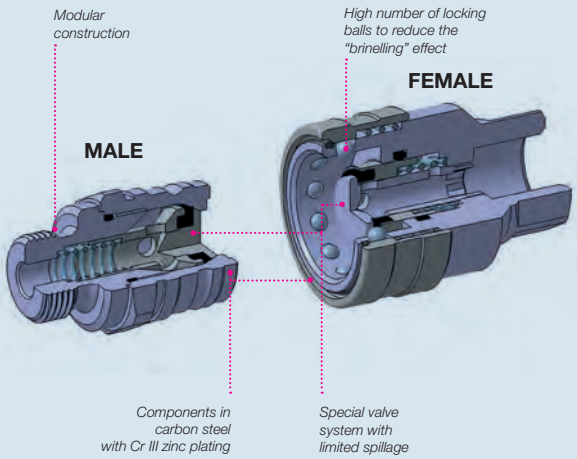

MAIN APPLICATIONS

PERFORMANCES

Size		Series/Size	Max. flow suggested		Connect force		Disconnect force		Spillage*
in	mm		l/min	gpm	N	lbf	N	lbf	ml
3/8	6,3	IFR8	46	12,15	170	38,25	27	6,08	0,06

Size	Series/Size	Max. operating pressure						Burst pressure					
		Coupled		Male		Female		Coupled		Male		Female	
	in	MPa	psi	MPa	psi	MPa	psi	MPa	psi	MPa	psi	MPa	psi
3/8	IFR8	15	2175	15	2175	15	2175	60	8700	60	8700	30	4350

* Spillage is an indicative value of the fluid loss during disconnection (according to ISO norm test method).

Different possible configurations:
Female without plug available upon request.
Different threads available upon request.

Temperature range:
Standard seal NBR (Nitrile): from -20 °C to +100 °C (from -4 °F to +212 °F).
Please read carefully Instructions and warnings for proper selection of the products.

Tests:
Qualification tests have been performed with hydraulic oil using couplings with NBR (Nitrile) seals.
The max. operating pressure have been verified fo 100.000 impulses according to ISO norm test method

WARNING

A defect, a wrong choice or an improper use of products, can cause injury to persons, animals and objects.
Never connect or disconnect with dynamic pressure (e.g. pump on).
Do not use the coupling disconnected with high impulse pressure.
Do not couple-uncouple with flow and/or pressure in the circuit.
Do not couple-uncouple when the temperature inside of the circuit is higher than 80 °C (176 °F).
Check the maximum allowable working pressure of the port in use.
Make sure that the medium used is compatible with seal and material as indicated for each series.
In case of doubt please contact Stucchi Technical Support.
The interchangeability is mentioned under the assumption that the manufacturer of the considered products has not changed any dimension.
It is mandatory to carefully read and closely follow the instructions before selecting or using any Stucchi products.
Always refer to the version uploaded in the Instructions and warning section of stucchigroup.com website for the latest release.
For specific, product-related, instructions, please contact Stucchi technical service.

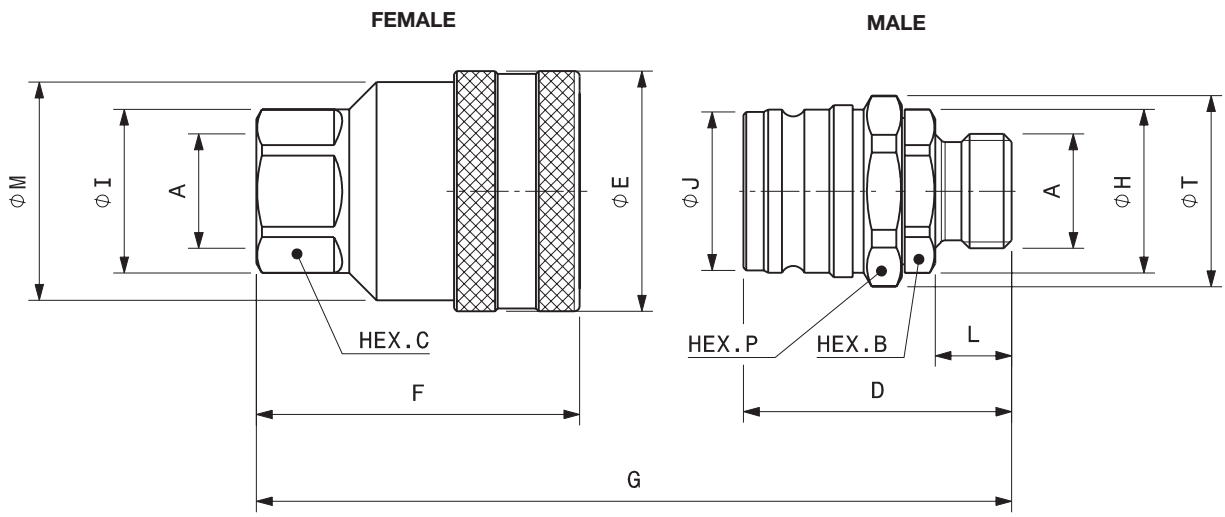

Port description: FEMALE THREAD BSPP (ISO 1179-1)
FEMALE THREAD METRIC

BODY SIZE	Descriptive Code	Item Code		ISO DN	PORT (A)	Overall Length mm		Overall Length in	Length	mm	in	Hex	mm	in	Diameter	mm	in	Diameter	mm	in	Diameter	mm	in
3/8"	F IFR8 3/8 BSP	Female	800200048	6,3	G3/8"	G	G = F+D-15	G = F+D-0.59	F	56,2	2,21	C	27,0	1,06	M	40,0	1,57	I	30,0	1,18	E	44,0	1,73
3/8"	F IFR8 1/2 BSP	Female	800200050	6,3	G 1/2"	G	G = F+D-15	G = F+D-0.59	F	59,2	2,33	C	27,0	1,06	M	40,0	1,57	I	30,0	1,18	E	44,0	1,73
3/8"	F IFR8 M18X1.5	Female	800212000	6,3	M18X1.5	G	G = F+D-15	G = F+D-0.59	F	54,2	2,13	C	27,0	1,06	M	40,0	1,57	I	30,0	1,18	E	44,0	1,73

Descriptive Code	Item Code		Weight kg	lb
F IFR8 3/8 BSP	Female	800200048	0,36	0,80
F IFR8 1/2 BSP	Female	800200050	0,43	0,94
F IFR8 M18X1.5	Female	800212000	0,36	0,80

Port description: MALE THREAD BSP (DIN 3852-2 form A)
MALE THREAD METRIC L series 24° (ISO 8434-1 & DIN 2353)

BODY SIZE	Descriptive Code	Item Code		ISO DN	PORT (A)	Overall Length mm		Overall Length in	Length	mm	in	Length	mm	in	Hex	mm	in	Hex	mm	in	Diameter	mm	in
3/8"	M IFR8 1/2 BSP EXT	Male	800200051	6,3	G 1/2"	G	G = F+D-15	G = F+D-0.59	D	49,1	1,93	L	14,0	0,55	B	27,0	1,06	P	32,0	1,26	T	35,0	1,38
3/8"	M IFR8 L12 SCHOTT 23	Male	800210003	6,3	M18X1.5	G	G = F+D-15	G = F+D-0.59	D	58,1	2,29	L	23,0	0,91	B	27,0	1,06	P	32,0	1,26	T	35,0	1,38
3/8"	M IFR8 L12 SCHOTT 30	Male	800210005	6,3	M18X1.5	G	G = F+D-15	G = F+D-0.59	D	65,1	2,56	L	30,0	1,18	B	27,0	1,06	P	32,0	1,26	T	35,0	1,38
3/8"	M IFR8 M20X1,5 EXT	Male	800215003	6,3	M20X1.5	G	G = F+D-15	G = F+D-0.59	D	58,1	2,29	L	23,0	0,91	B	27,0	1,06	P	32,0	1,26	T	35,0	1,38

Descriptive Code	Item Code		Diameter	mm	in	Diameter	mm	in	Weight kg	lb
M IFR8 1/2 BSP EXT	Male	800200051	H	30,0	1,18	J	29,0	1,14	0,19	0,42
M IFR8 L12 SCHOTT 23	Male	800210003	H	30,0	1,18	J	29,0	1,14	0,19	0,43
M IFR8 L12 SCHOTT 30	Male	800210005	H	30,0	1,18	J	29,9	1,18	0,20	0,45
M IFR8 M20X1,5 EXT	Male	800215003	H	30,0	1,18	J	29,0	1,14	0,20	0,44

PROTECTIVE CAPS FOR IFR SERIES

Protective caps are always recommended to protect the couplings from damage, dirt inclusion, and will increase the product life. This is particularly important in agricultural applications where exposure to weather and aggregate materials are common.

Metallic plug for female and plastic cap for male are included with the IFR couplings.

- The plug for female coupling is in carbon steel Cr III zinc plated.
- The standard color of plastic cap for male coupling is Yellow.
- Temperature range: from -20°C to +100°C.

Plug for FEMALE coupling
Carbon steel

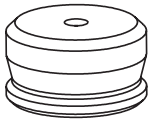

Cap for MALE coupling
Yellow plastic

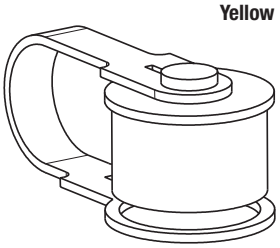

Protective Cap			
Body Size/Description		Part Number	
		Metallic plug for Female	Plastic cap for Male
3/8”	IFR8	815701120	814901027

STUCCHI Quick Couplings Catalog - December 2024 - All right reserved.
Texts, data and illustrations mentioned in this catalogue may be changed by Stucchi at any time, without notice; always refer to the version uploaded on the English version of stucchigroup.com/en website for the latest release. In case of doubt, please contact Stucchi technical service..

High Pressure

A-HP

p. 221

Valving style: Flat Face
Interchange: Stucchi profile
Sealing description: Nitrile NBR
Available sizes: From 1/8” to 3/8”
Operating pressure: Up to 700 bar
Flow rate: Up to 46 l/min
Material / Treatment:
Carbon steel / Cr3

IV-HP

p. 225

Valving style: Ball
Interchange: With similar couplings (high pressure)
Sealing description: Nitrile NBR
Available sizes: From 1/4” to 3/8”
Operating pressure: Up to 700 bar
Flow rate: Up to 23 l/min
Material / Treatment:
Carbon steel / Cr3

A-HPSERIES

INTERCHANGE > **Stucchi profile**

Stucchi®

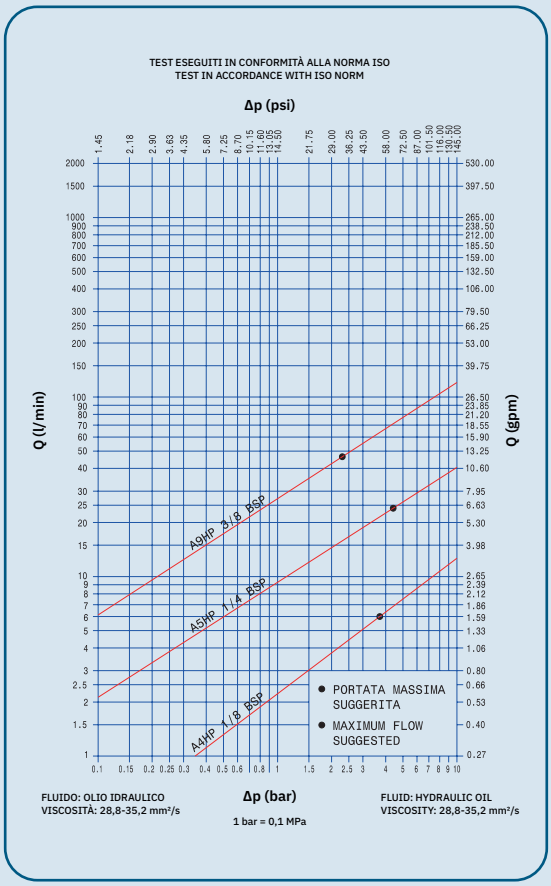

TECHNICAL FEATURES AND OPTIONS

Interchange
Stucchi profile

Sealing description
Nitrile NBR

Connection system
Push

Available sizes
from 1/8" to 3/8"

Material /treatment
Carbon steel /Cr3

Available threads
BSP - NPT

Operating pressure
Up to 700 bar

Locking mechanism
Locking Ball + Safety sleeve

Flow rate
Up to 46 l/min

Temperature (°C)
-20°C / +100°C

Valving style
Flat face

Connection under pressure
Connection: not allowed
Disconnection: not allowed

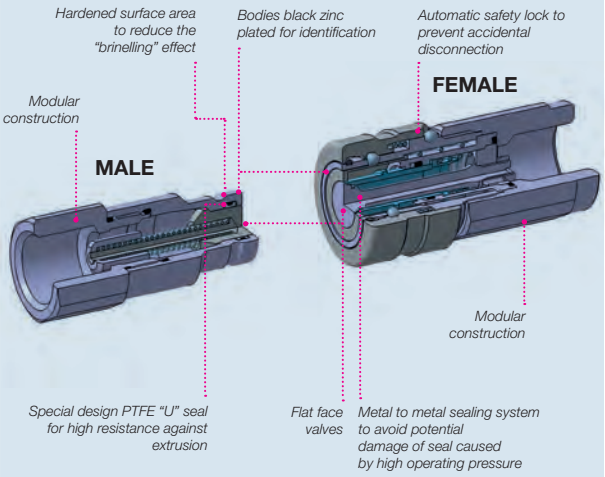

BENEFITS

- Flat face is easy to clean, reducing the inclusion of contamination inside the hydraulic circuit.
- Minimal fluid spillage during disconnection, reducing fluid spillage to the environment.
- Minimal air inclusion during connection.
- Internal design reduces pressure drop, increasing circuit efficiency.
- Automatic safety lock to prevent accidental disconnection.
  This safety feature is very important mainly for the rescue equipment.
- The modular structure allows broad range of port configurations.
- Compact slim design.
- Safe and simple to use.

HOW TO USE

- Before to connect, clean the mating surface of the couplings to avoid dirt inclusion in the circuit.
- To connect push the male half towards the female half or vice versa until the coupler sleeve clicks.
- Upon connection the safety sleeve automatically rotates engaging the safety lock mechanism. In this safety lock position the coupling cannot be disconnected until the operator aligns the sleeve in the proper position (safety locking ball aligned with the notch in the coupler sleeve).
- To disconnect turn the external sleeve until the until the stop and push back the sleeve.

MAIN APPLICATIONS

A-HPSERIES

Stucchi®

PERFORMANCES

Size	Series/Size	Max. flow suggested		Connect force		Disconnect force		Spillage*
in		l/min	gpm	N	lbf	N	lbf	ml
1/8	A4HP	6	1,59	95	21,38	40	9,00	0,04
1/4	A5HP	24	6,36	125	28,13	45	10,13	0,02
3/8	A9HP	46	12,19	205	46,13	50	11,25	0,02

Size	Series/Size	Max. operating pressure						Burst pressure					
		Coupled		Male		Female		Coupled		Male		Female	
in		MPa	psi	MPa	psi	MPa	psi	MPa	psi	MPa	psi	MPa	psi
1/8	A4HP	70	10150	70	10150	70	10150	160	23200	160	23200	160	23200
1/4	A5HP	70	10150	70	10150	50	7250	200	29000	200	29000	150	21750
3/8	A9HP	70	10150	70	10150	42	6090	180	26100	200	29000	125	18125

* Spillage is an indicative value of the fluid loss during disconnection (according to ISO norm test method).

Different possible configurations:
Different threads available upon request.

Temperature range:
Standard seals NBR (Nitrile): from -20 °C to +100 °C (from -4 °F to +212 °F).
Please read carefully Instructions and warnings for proper selection of the products.

Tests:
Qualification tests have been performed with hydraulic oil using couplings with NBR (Nitrile) seals.
The max. operating pressure have been verified fo 100.000 impulses according to ISO norm test method.
A4HP has been tested for 10.000 impulses.

WARNING

A defect, a wrong choice or an improper use of products, can cause injury to persons, animals and objects.
Never connect or disconnect with dynamic pressure (e.g. pump on).
Do not use the female coupling disconnected with high impulse pressure.
Do not couple-uncouple with flow and/or pressure in the circuit.
Do not couple-uncouple when the temperature inside of the circuit is higher than 80 °C (176 °F).
Check the maximum allowable working pressure of the port in use.
Make sure that the medium used is compatible with seal and material as indicated for each series.
In case of doubt please contact Stucchi Technical Support.
The interchangeability is mentioned under the assumption that the manufacturer of the considered products has not changed any dimension.
It is mandatory to carefully read and closely follow the instructions before selecting or using any Stucchi products.
Always refer to the version uploaded in the Instructions and warning section of stucchigroup.com website for the latest release.
For specific, product-related, instructions, please contact Stucchi technical service.

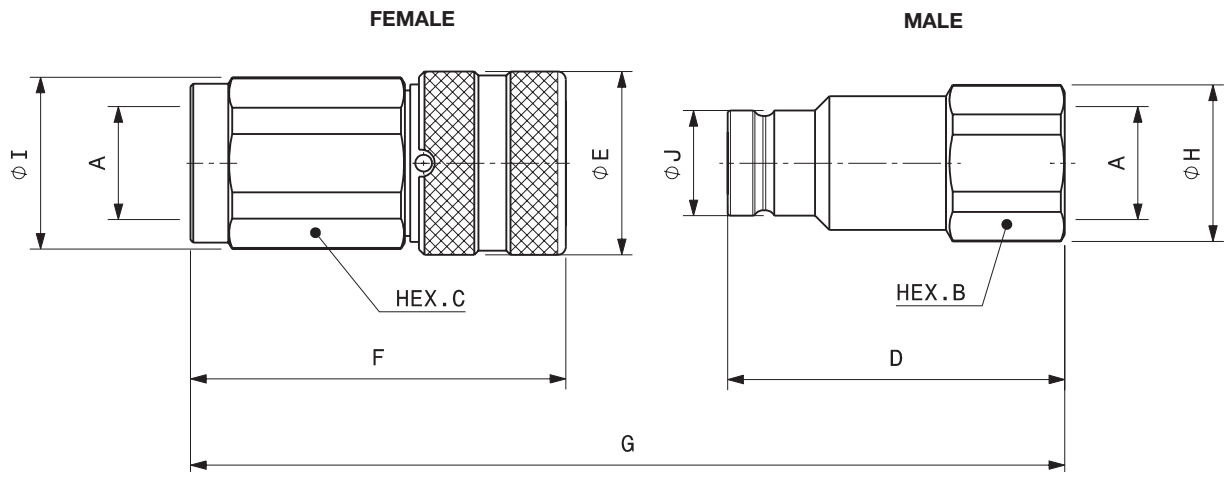

Port description: FEMALE THREAD NPT (ANSI B.1.20.1)

BODY SIZE	Descriptive Code	Item Code		PORT (A)	Overall Length			Length			Hex			Diameter			Diameter			Weight	
						mm	in		mm	in		mm	in		mm	in		mm	in	kg	lb
1/8"	**F A4HP 1/8 NPT**	Female	**801601014**	1/8"	G	72,3	2,85	F	44,0	1,73	C	17,0	0,67	I	21,8	0,86	E	22,0	0,87	0,09	0,20
	M A4HP 1/8 NPT	Male	**801601015**					D	36,2	1,43	B	17,0	0,67	H	18,5	0,73	J	12,0	0,47	0,04	0,09
1/4"	**F A5HP 1/4 NPT**	Female	**801601004**	1/4"	G	94,9	3,74	F	58,0	2,28	C	22,0	0,87	I	29,0	1,14	E	29,0	1,14	0,21	0,45
	M A5HP 1/4 NPT	Male	**801601005**					D	47,9	1,89	B	22,0	0,87	H	23,8	0,94	J	16,5	0,65	0,09	0,20
1/4"	**F A5HP 3/8 NPT**	Female	**801601008**	3/8"	G	103,9	4,09	F	60,0	2,36	C	24,0	0,94	I	29,0	1,14	E	29,0	1,14	0,21	0,46
	M A5HP 3/8 NPT	Male	**801601009**					D	54,9	2,16	B	24,0	0,94	H	26,0	1,02	J	16,5	0,65	0,11	0,24
3/8"	**F A9HP 3/8 NPT**	Female	**801601010**	3/8"	G	108,8	4,28	F	64,6	2,54	C	30,0	1,18	I	32,0	1,26	E	34,0	1,34	0,32	0,71
	M A9HP 3/8 NPT	Male	**801601011**					D	60,0	2,36	B	27,0	1,06	H	29,0	1,14	J	19,5	0,77	0,15	0,34
3/8"	**F A9HP 1/2 NPT**	Female	**801601012**	1/2"	G	116,3	4,58	F	69,6	2,74	C	30,0	1,18	I	32,0	1,26	E	34,0	1,34	0,31	0,68
	M A9HP 1/2 NPT	Male	**801601013**					D	62,5	2,46	B	27,0	1,06	H	29,0	1,14	J	19,5	0,77	0,14	0,32

For complete technical information see stucchigroup.com - STUCCHI S.p.A. - December 2024 - All right reserved.
The texts, data and illustrations indicated in this catalogue, may be changed by Stucchi S.p.A at any time without notice. (CAT A-HP - EN REV.3).


PRESSURE
0
10
20
30
40
50
60
70
80

IV-HPSERIES

INTERCHANGE > **with similar couplings (High Pressure)**

Stucchi®

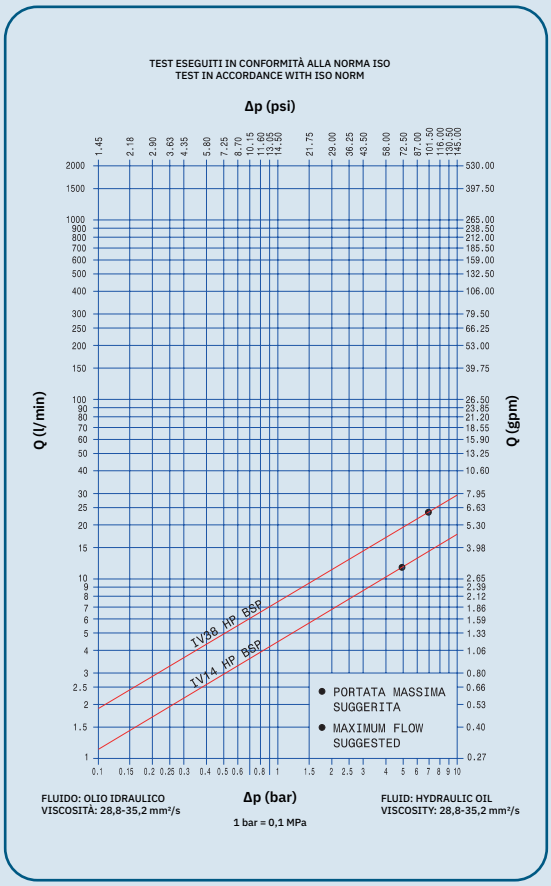

TECHNICAL FEATURES AND OPTIONS

Interchange
ISO 14540
(High Pressure)

Sealing description
Nitrile NBR

Connection system
Screw

Available sizes
from 1/4"
to 3/8"

Material /treatment
Carbon steel
/Cr3

Available threads
NPT

Operating pressure
Up to 700 bar

Locking mechanism
Screw
to connect

Flow rate
Up to 23 l/min

Temperature (°C)
-20°C / +100°C

Valving style
Ball

Connection under pressure
Connection: not allowed
Disconnection: not allowed

BENEFITS

- Ball valves in hardened steel provide a good wearing resistance.
- Compact slim design.
- Simple to use.

HOW TO USE

- Before to connect, clean the mating surface of the couplings to avoid dirt inclusion in the circuit.
- To connect insert the male coupling in the female coupling, move forward the sleeve of the female coupling and screw it manually on the male coupling till it blocks.
- To disconnect unscrew totally the sleeve from the male coupling.

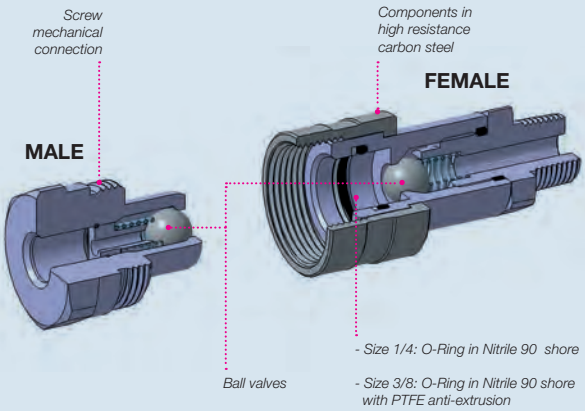

MAIN APPLICATIONS

PERFORMANCES

Size	Series/Size	Max. flow suggested		Max. operating pressure	
in		l/min	gpm	MPa	psi
1/4	IV14HP	12	3,18	70	10150
3/8	IV38HP	23	6,10	70	10150

Temperature range:
Standard seals NBR (Nitrile): from -20 °C to +100 °C (from -4 °F to +212 °F).
Please read carefully Instructions and warnings for proper selection of the products.

Different possible configurations:
Different threads available upon request.

WARNING

A defect, a wrong choice or an improper use of products, can cause injury to persons, animals and objects.
Never connect or disconnect with dynamic pressure (e.g. pump on).
Do not use the coupling disconnected with high impulse pressure.
Do not couple-uncouple with flow and/or pressure in the circuit.
Do not couple-uncouple when the temperature inside of the circuit is higher than 80 °C (176 °F).
Check the maximum allowable working pressure of the port in use.
Make sure that the medium used is compatible with seal and material as indicated for each series.
In case of doubt please contact Stucchi Technical Support.
The interchangeability is mentioned under the assumption that the manufacturer of the considered products has not changed any dimension.
It is mandatory to carefully read and closely follow the instructions before selecting or using any Stucchi products.
Always refer to the version uploaded in the Instructions and warning section of stucchigroup.com website for the latest release.
For specific, product-related, instructions, please contact Stucchi technical service.

Stucchi®

Female with external thread

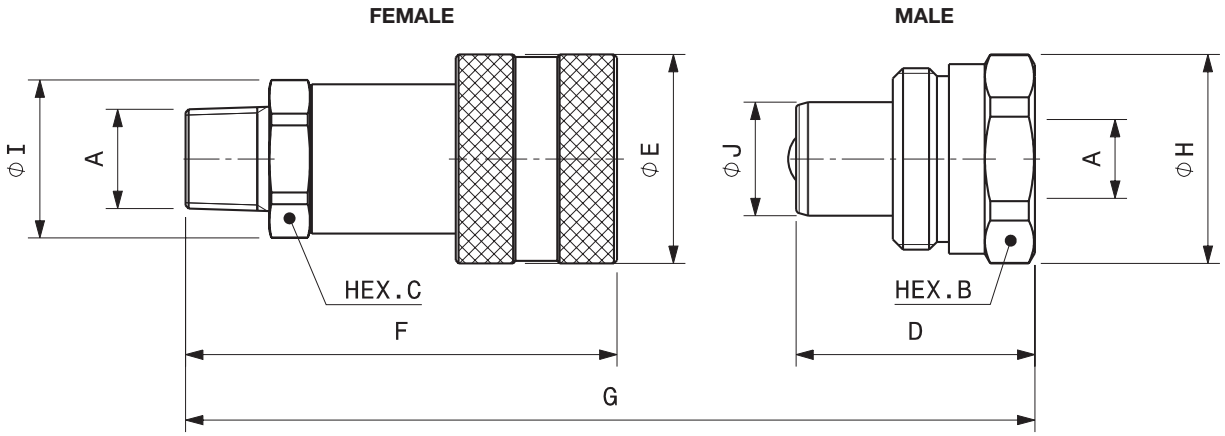

Female with internal thread

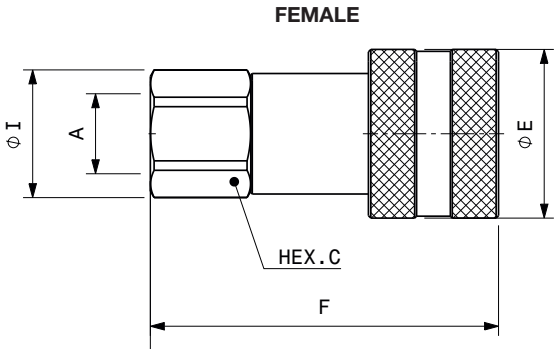

Port description: FEMALE THREAD NPT (ANSI B1.20.1)
- MALE THREAD NPT (ANSI B1.20.1)

BODY SIZE	Descriptive Code	Item Code		PORT (A)		Overall Length mm	Overall Length in	Length	mm	in	Hex	mm	in	Diameter	mm	in	Diameter	mm	in	Weight kg	Weight lb
1/4"	F IV14HP 1/4 NPT EXT	Female	800201008	1/4"	G	74,5	2,93	F	60,8	2,39	C	22,0	0,87	I	24,5	0,96	E	28,0	1,10	0,14	0,30
1/4"	F IV14HP 1/4 NPT	Female	800201034	1/4"				F	60,8	2,39	C	22,0	0,87	I	24,5	0,96	E	28,0	1,10	0,14	0,30
1/4"	M IV14HP 1/4 NPT	Male	800201009	1/4"				D	32,5	1,28	B	19,0	0,75	H	28,0	1,10	J	15,8	0,62	0,07	0,16
3/8"	F IV38HP 1/4 NPT EXT	Female	800201006	1/4"	G	F+D-18,8	F+D-0,74	F	72,3	2,85	C	24,0	0,94	I	26,5	1,04	E	35,0	1,38	0,21	0,47
3/8"	F IV38HP 1/4 NPT	Female	800201022	1/4"				F	69,9	2,75	C	24,0	0,94	I	26,5	1,04	E	35,0	1,38	0,22	0,49
3/8"	M IV38HP 1/4 NPT	Male	800201023	1/4"				D	40,0	1,57	B	32,0	1,26	H	35,0	1,38	J	19,0	0,75	0,15	0,33
3/8"	F IV38HP 3/8 NPT EXT	Female	800201004	3/8"	G	F+D-25,4	F+D-1,00	F	72,2	2,84	C	24,0	0,94	I	26,5	1,04	E	35,0	1,38	0,22	0,49
3/8"	F IV38HP 3/8 NPT	Female	800201014	3/8"				F	72,3	2,85	C	24,0	0,94	I	26,5	1,04	E	35,0	1,38	0,24	0,52
3/8"	M IV38HP 3/8 NPT	Male	800201005	3/8"				D	40,0	1,57	B	32,0	1,26	H	35,0	1,38	J	19,0	0,75	0,14	0,31

SPARE KIT SEAL FOR FEMALE

Repair kit / OR (+BK)		
Body Size	Description	Part Number
1/4”	OR F IV14HP	815700652
3/8”	OR+BK F IV38HP	815700650

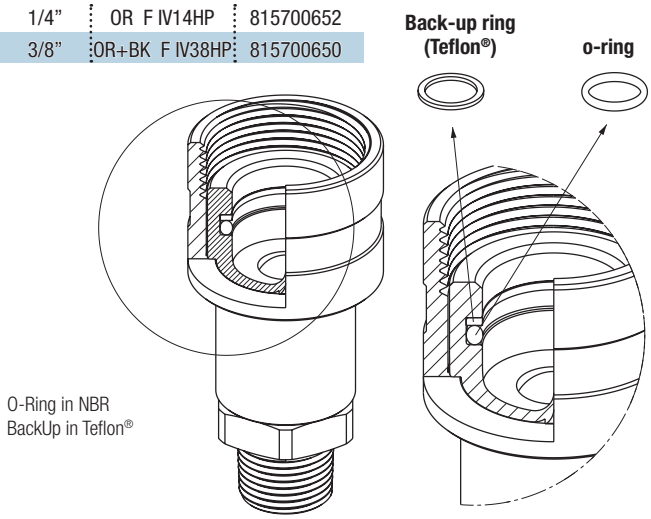

PROTECTIVE CAPS FOR IV-HP SERIES

Protective caps are always recommended to protect the couplings from damage, dirt inclusion, and will increase the product life. For the IV-HP series are available two kind of materials:

- Plastic caps with lanyard (standard color: black)
- Cr3 steel with lanyard (standard colors: natural)

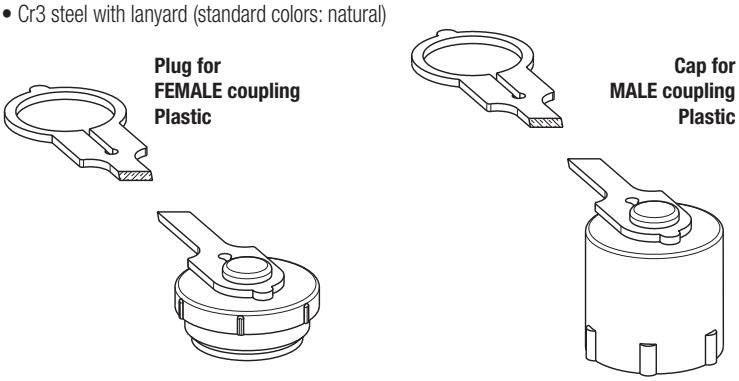

Protective Cap				
Body Size/Description		Part Number		Material/Color
		Plug for Female	Cap for Male	
1/4”	IV14HP	815603010	815603011	Plastic/Black
3/8”	IV38HP	815603012	815603013	Plastic/Black

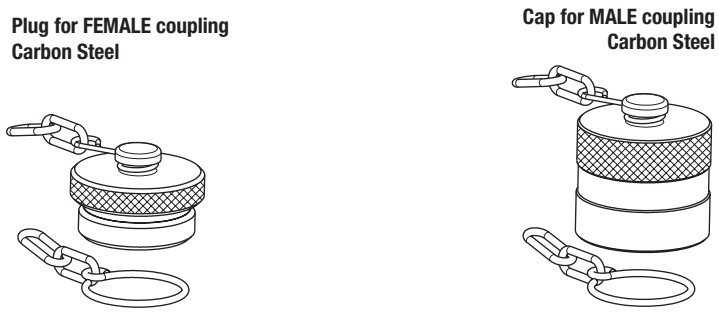

Protective Cap				
Body Size/Description		Part Number		Material/Color
		Plug for Female	Cap for Male	
1/4”	IV14HP	815605004	815605005	Carbon steel/Chrome 3
3/8”	IV38HP	815605002	815605003	Carbon steel/Chrome 3

STUCCHI Quick Couplings Catalog - December 2024 - All right reserved.
Texts, data and illustrations mentioned in this catalogue may be changed by Stucchi at any time, without notice; always refer to the version uploaded on the English version of stucchigroup.com/en website for the latest release. In case of doubt, please contact Stucchi technical service.

Check Valve

VUZ

p. 233

Available sizes: From 1/8” to 2”
Operating pressure: Up to 400 bar
Flow rate: Up to 1000 l/min
Material / Treatment:
Carbon steel / Cr3

VUZSERIES

Stucchi®

TECHNICAL FEATURES AND OPTIONS

Available sizes
from 1/8" to 2"

Material
High strength carbon steel

Available threads
BSP - NPT - SAE

Standard cracking pressure
0,35 - 4,5 bar

Flow rate
Up to 1000 l/min

Sealing description
Metal to metal seal

Operating pressure
Up to 400 bar

BENEFITS

- Optimal wearing resistance of the hardened sealing piston.
- Compact slim design.
- Different cracking pressure available upon request
- Simple to use.

HOW TO USE

- Install the "VUZ" by matching the flow direction with the arrow stamped on the valve.
- To ensure a good efficiency of the system, it is important to select correctly the valve based on flow performances, pressure drop and application.

  See the pressure drop graph.

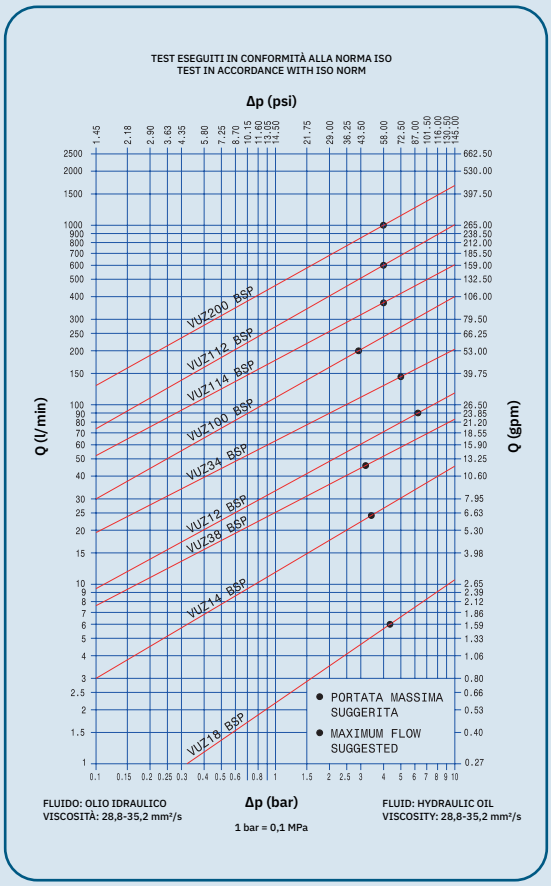

The values of pressure drop are referred to check valve totally opened. If the pressure in the circuit is not sufficient to open totally the valve, the value of pressure drop change.

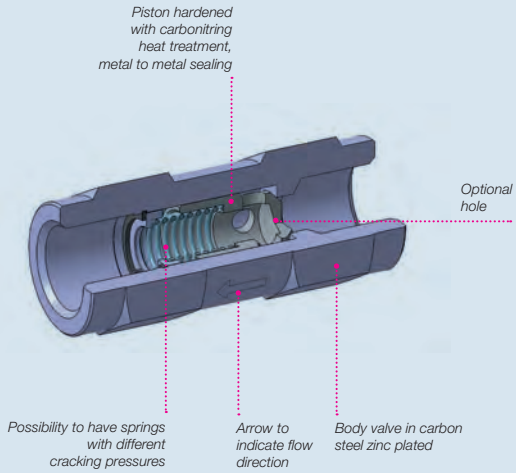

MAIN APPLICATIONS

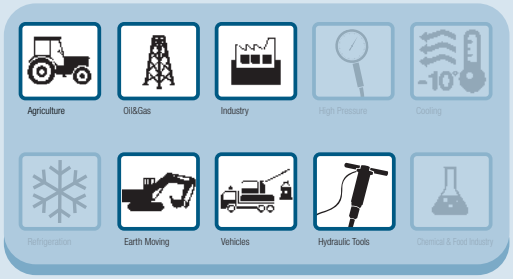

PERFORMANCES

Size	Series/Size		Max. suggested flow		Max. operating pressure		Burst pressure	
in	VUZ	VU	l/min	gpm	MPa	psi	MPa	psi
1/8	VUZ18	VU18	6	1,59	40	5800	160	23200
1/4	VUZ14	VU14	24	6,36	35	5075	140	20300
3/8	VUZ38	VU38	46	12,19	35	5075	140	20300
1/2	VUZ12	VU12	90	23,85	30	4350	120	17400
3/4	VUZ34	VU34	148	39,22	30	4350	120	17400
1	VUZ100	VU100	200	53,00	30	4350	120	17400
1-1/4	VUZ114	VU114	378	100,17	25	3625	100	14500
1-1/2	VUZ112	VU112	600	159,00	25	3625	100	14500
2	VUZ200	VU200	1000	265,00	15	2175	45	6525

Temperature range:
from -20 °C to +120 °C (from -4 °F to +248 °F).
Please read carefully Instructions and warnings for proper selection of the products.

Different possible configurations:
The VUZ series is also available (in addition to CR3 treatment) with phosphating surface treatment that help the adhesion of paint.
It can be recognized by the burnished black color.
For further information please contact Stucchi Technical support.

VU Series

VUZ series is also available with phosphate conversion coating to help painting adhesion; this series is called VU.

VU products differs from the standard VUZ for their black color.

WARNING

A defect, a wrong choice or an improper use of products, can cause injury to persons, animals and objects.
Make sure that the medium used is compatible with the material as indicate.
In case of doubt please contact Stucchi Technical Support.
The interchangeability is mentioned under the assumption that the manufacturer of the considered products has not changed any dimension.
It is mandatory to carefully read and closely follow the instructions before selecting or using any Stucchi products.
Always refer to the version uploaded in the Instructions and warning section of stucchigroup.com website for the latest release.
For specific, product-related, instructions, please contact Stucchi technical service.

VUZSERIES

Stucchi®

Reference table for different configuration

BSP THREAD			
BODY SIZE	CRACKING PRESSURES	DESCRIPTIVE CODE	ITEM CODE
1/8"	5 PSI	VUZ18 BSP 5 PSI	810500100
1/4"	5 PSI	VUZ14 BSP 5 PSI	810500101
3/8"	5 PSI	VUZ38 BSP 5 PSI	810500102
1/2"	5 PSI	VUZ12 BSP 5 PSI	810500103
3/4"	5 PSI	VUZ34 BSP 5 PSI	810500104
1"	5 PSI	VUZ100 BSP 5 PSI	810500105
1 1/4"	5 PSI	VUZ114 BSP 5 PSI	810500106
1 1/2"	5 PSI	VUZ112 BSP 5 PSI	810500107
2"	5 PSI	VUZ200 BSP 5 PSI	810500108
1/4"	14 PSI	VUZ14 BSP 14 PSI	810500200
3/8"	14 PSI	VUZ38 BSP 14 PSI	810500201
1/2"	14 PSI	VUZ12 BSP 14 PSI	810500202
3/4"	14 PSI	VUZ34 BSP 14 PSI	810500203
1"	14 PSI	VUZ100 BSP 14 PSI	810500204
3/4"	30 PSI	VUZ34 BSP 30 PSI	810500300
1/8"	65 PSI	VUZ18 BSP 65 PSI	810500400
1/4"	65 PSI	VUZ14 BSP 65 PSI	810500401
3/8"	65 PSI	VUZ38 BSP 65 PSI	810500402
1/2"	65 PSI	VUZ12 BSP 65 PSI	810500403
3/4"	65 PSI	VUZ34 BSP 65 PSI	810500404
1"	65 PSI	VUZ100 BSP 65 PSI	810500405
1 1/4"	65 PSI	VUZ114 BSP 65 PSI	810500406
1 1/2"	65 PSI	VUZ112 BSP 65 PSI	810500407
2"	65 PSI	VUZ200 BSP 65 PSI	810500408
1 1/2"	73 PSI	VUZ112 BSP 73 PSI	810500500 *
1/2"	115 PSI	VUZ12 BSP 115 PSI	810500602
3/4"	115 PSI	VUZ34 BSP 115 PSI	810500603
3/4"	145 PSI	VUZ34 BSP 145 PSI	810500600
1"	145 PSI	VUZ100 BSP 145 PSI	810500601

NPT THREAD			
BODY SIZE	CRACKING PRESSURES	DESCRIPTIVE CODE	ITEM CODE
1/8"	5 PSI	VUZ18 NPT 5 PSI	810501100
1/4"	5 PSI	VUZ14 NPT 5 PSI	810501101
3/8"	5 PSI	VUZ38 NPT 5 PSI	810501102
1/2"	5 PSI	VUZ12 NPT 5 PSI	810501103
3/4"	5 PSI	VUZ34 NPT 5 PSI	810501104
1"	5 PSI	VUZ100 NPT 5 PSI	810501105
1 1/4"	5 PSI	VUZ114 NPT 5 PSI	810501106
1 1/2"	5 PSI	VUZ112 NPT 5 PSI	810501107
2"	5 PSI	VUZ200 NPT 5 PSI	810501108
1/4"	65 PSI	VUZ14 NPT 65 PSI	810501401
3/8"	65 PSI	VUZ38 NPT 65 PSI	810501402
1/2"	65 PSI	VUZ12 NPT 65 PSI	810501403
3/4"	65 PSI	VUZ34 NPT 65 PSI	810501404
1"	65 PSI	VUZ100 NPT 65 PSI	810501405
1 1/4"	65 PSI	VUZ114 NPT 65 PSI	810501406
1 1/2"	65 PSI	VUZ112 NPT 65 PSI	810501407
2"	65 PSI	VUZ200 NPT 65 PSI	810501408

SAE THREAD			
BODY SIZE	CRACKING PRESSURES	DESCRIPTIVE CODE	ITEM CODE
1/4"	5 PSI	VUZ14 SAE 5 PSI	810504100
3/8"	5 PSI	VUZ38 SAE 5 PSI	810504101
1/2"	5 PSI	VUZ12 SAE 5 PSI	810504102
3/4"	5 PSI	VUZ34 SAE 5 PSI	810504103
1"	5 PSI	VUZ100 SAE 5 PSI	810504104
1 1/4"	5 PSI	VUZ114 SAE 5 PSI	810504105
1 1/2"	5 PSI	VUZ112 SAE 5 PSI	810504106
2"	5 PSI	VUZ200 SAE 5 PSI	810504107
1 1/4"	14 PSI	VUZ114 SAE 14 PSI	810504200
3/4"	30 PSI	VUZ34 SAE 30 PSI	810504300
1"	65 PSI	VUZ100 SAE 65 PSI	810504400
3/8"	65 PSI	VUZ38 SAE 65 PSI	810504401
1/2"	65 PSI	VUZ12 SAE 65 PSI	810504402
3/4"	65 PSI	VUZ34 SAE 65 PSI	810504403
1"	65 PSI	VUZ14 SAE 65 PSI	810504404
1 1/4"	65 PSI	VUZ114 SAE 65 PSI	810504405
1 1/2"	65 PSI	VUZ112 SAE 65 PSI	810504406
2	65 PSI	VUZ200 SAE 65 PSI	810504407 *

* Available upon request.

PRODUCT DEFINITION

VUZ — Check valve

38 — Size 3/8"

F1,5 — Diameter optional hole

BSP — Thread

5 PSI — Cracking pressure

VUSERIES

Stucchi®

Reference table for different configuration

BSP THREAD			
BODY SIZE	CRACKING PRESSURE	DESCRIPTIVE CODE	ITEM CODE
1/8"	5 PSI	**VU18 BSP 5 PSI**	810200100
1/4"	5 PSI	**VU14 BSP 5 PSI**	810200101
3/8"	5 PSI	**VU38 BSP 5 PSI**	810200102
1/2"	5 PSI	**VU12 BSP 5 PSI**	810200103
3/4"	5 PSI	**VU34 BSP 5 PSI**	810200104
1"	5 PSI	**VU100 BSP 5 PSI**	810200105
1 1/4"	5 PSI	**VU114 BSP 5 PSI**	810200106
1 1/2"	5 PSI	**VU112 BSP 5 PSI**	810200107
2"	5 PSI	**VU200 BSP 5 PSI**	810200108
1/4"	14 PSI	**VU14 BSP 14 PSI**	810200200
3/8"	14 PSI	**VU38 BSP 14 PSI**	810200206
1/2"	14 PSI	**VU12 BSP 14 PSI**	810200201
3/4"	14 PSI	**VU34 BSP 14 PSI**	810200202
1"	14 PSI	**VU100 BSP 14 PSI**	810200203
1 1/4"	14 PSI	**VU114 BSP 14 PSI**	810200204
1 1/2"	14 PSI	**VU112 BSP 14 PSI**	810200205
2"	14 PSI	**VU200 BSP 14 PSI**	810200207
1/8"	65 PSI	**VU18 BSP 65 PSI**	810200400
1/4"	65 PSI	**VU14 BSP 65 PSI**	810200401
3/8"	65 PSI	**VU38 BSP 65 PSI**	810200402
1/2"	65 PSI	**VU12 BSP 65 PSI**	810200403
3/4"	65 PSI	**VU34 BSP 65 PSI**	810200404
1"	65 PSI	**VU100 BSP 65 PSI**	810200405
1 1/4"	65 PSI	**VU114 BSP 65 PSI**	810200406
1 1/2"	65 PSI	**VU112 BSP 65 PSI**	810200407
2"	65 PSI	**VU200 BSP 65 PSI**	810200408
1/2"	115 PSI	**VU12 BSP 115 PSI**	810200600
3/4"	115 PSI	**VU34 BSP 115 PSI**	810200601
1/2"	145 PSI	**VU12 BSP 145 PSI**	810200605
3/4"	145 PSI	**VU34 BSP 145 PSI**	810200603
1"	145 PSI	**VU100 BSP 145 PSI**	810200602
1 1/4"	145 PSI	**VU114 BSP 145 PSI**	810200608 *
2"	145 PSI	**VU200 BSP 145 PSI**	810200607

NPT THREAD			
BODY SIZE	CRACKING PRESSURE	DESCRIPTIVE CODE	ITEM CODE
1/8"	5 PSI	**VU18 NPT 5 PSI**	810201100
1/4"	5 PSI	**VU14 NPT 5 PSI**	810201101
3/8"	5 PSI	**VU38 NPT 5 PSI**	810201102
1/2"	5 PSI	**VU12 NPT 5 PSI**	810201103
1/2"	5 PSI	**VU12EI NPT 5 PSI**	810201112
3/4"	5 PSI	**VU34 NPT 5 PSI**	810201104
1"	5 PSI	**VU100 NPT 5 PSI**	810201105
1 1/4"	5 PSI	**VU114 NPT 5 PSI**	810201106
1 1/2"	5 PSI	**VU112 NPT 5 PSI**	810201107
2"	5 PSI	**VU200 NPT 5 PSI**	810201108
1/4"	14 PSI	**VU14 NPT 14 PSI**	810201200
1/2"	14 PSI	**VU12 NPT 14 PSI**	810201201
3/4"	14 PSI	**VU34 NPT 14 PSI**	810201202
1"	14 PSI	**VU100 NPT 14 PSI**	810201203
1 1/4"	14 PSI	**VU114 NPT 14 PSI**	810201204
1 1/2"	14 PSI	**VU112 NPT 14 PSI**	810201205
1/8"	65 PSI	**VU18 NPT 65 PSI**	810201400
1/4"	65 PSI	**VU14 NPT 65 PSI**	810201401
3/8"	65 PSI	**VU38 NPT 65 PSI**	810201402
1/2"	65 PSI	**VU12 NPT 65 PSI**	810201403
3/4"	65 PSI	**VU34 NPT 65 PSI**	810201404
1"	65 PSI	**VU100 NPT 65 PSI**	810201405
1 1/4"	65 PSI	**VU114 NPT 65 PSI**	810201406
1 1/2"	65 PSI	**VU112 NPT 65 PSI**	810201407
2"	65 PSI	**VU200 NPT 65 PSI**	810201408
1/2"	115 PSI	**VU12 NPT 115 PSI**	810201600
3/4"	115 PSI	**VU34 NPT 115 PSI**	810201601
1"	145 PSI	**VU100 NPT 145 PSI**	810201602

SAE THREAD			
BODY SIZE	CRACKING PRESSURE	DESCRIPTIVE CODE	ITEM CODE
1/4"	5 PSI	**VU14 SAE 5 PSI**	810204100
3/8"	5 PSI	**VU38 SAE 5 PSI**	810204101
1/2"	5 PSI	**VU12 SAE 5 PSI**	810204102
1/2"	5 PSI	**VU12EI SAE 5 PSI**	810204111
3/4"	5 PSI	**VU34 SAE 5 PSI**	810204103
1"	5 PSI	**VU100 SAE 5 PSI**	810204104
1 1/4"	5 PSI	**VU114 SAE 5 PSI**	810204105
1 1/2"	5 PSI	**VU112 SAE 5 PSI**	810204106
2"	5 PSI	**VU200 SAE 5 PSI**	810204107
3/8"	65 PSI	**VU38 SAE 65 PSI**	810204401
1/2"	65 PSI	**VU12 SAE 65 PSI**	810204402
3/4"	65 PSI	**VU34 SAE 65 PSI**	810204403
1"	65 PSI	**VU100 SAE 65 PSI**	810204404
1 1/4"	65 PSI	**VU114 SAE 65 PSI**	810204405
1 1/2"	65 PSI	**VU112 SAE 65 PSI**	810204406
2"	65 PSI	**VU200 SAE 65 PSI**	810204407
1"	145 PSI	**VU100 SAE 145 PSI**	810204600

* Available upon request.

CHECK VALVE

PRODUCT DEFINITION

VU — Check valve

38 — Size 3/8”

F1,5 — Diameter optional hole

BSP — Thread

5 PSI — Cracking pressure

Stucchi®

VALVE

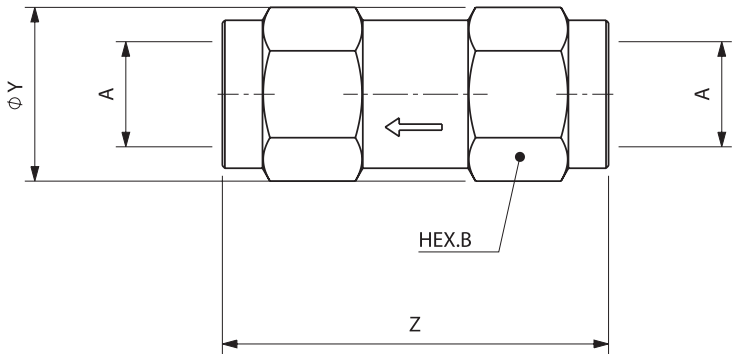

Port description: FEMALE THREAD BSPP (ISO 1179-1)

Descriptive Code		Item Code	PORT (A)	Overall Length			Hex			Diameter			Weight	
VUZ	VU				mm	in		mm	in		mm	in	kg	lb
VUZ18 BSP	VU18 BSP	see reference table	1/8"	Z	44,0	1,73	B	14,0	0,55	Y	16,2	0,64	0,04	0,08
VUZ14 BSP	VU14 BSP	see reference table	1/4"	Z	60,0	2,36	B	19,0	0,75	Y	21,9	0,86	0,09	0,20
VUZ38 BSP	VU38 BSP	see reference table	3/8"	Z	70,0	2,76	B	24,0	0,94	Y	27,7	1,09	0,18	0,39
VUZ12 BSP	VU12 BSP	see reference table	1/2"	Z	77,0	3,03	B	30,0	1,18	Y	34,6	1,36	0,30	0,66
VUZ34 BSP	VU34 BSP	see reference table	3/4"	Z	90,0	3,54	B	36,0	1,42	Y	41,6	1,64	0,49	1,08
VUZ100 BSP	VU100 BSP	see reference table	1"	Z	106,0	4,17	B	45,0	1,77	Y	52,0	2,05	0,87	1,92
VUZ114 BSP	VU114 BSP	see reference table	1-1/4"	Z	125,0	4,92	B	55,0	2,17	Y	63,5	2,50	1,49	3,28
VUZ112 BSP	VU112 BSP	see reference table	1-1/2"	Z	140,0	5,51	B	65,0	2,56	Y	75,1	2,96	2,43	5,35
VUZ200 BSP	VU200 BSP	see reference table	2"	Z	160,0	6,30	B	75,0	2,95	Y	86,6	3,41	3,13	6,90

Port description: FEMALE THREAD NPT (ANSI B.1.20.1)

Descriptive Code		Item Code	PORT (A)	Overall Length			Wrench Flat			Diameter			Weight	
VUZ	VU				mm	in		mm	in		mm	in	kg	lb
VUZ18 NPT	VU18 NPT	see reference table	1/8"	Z	44,0	1,73	B	14,0	0,55	Y	16,2	0,64	0,04	0,08
VUZ14 NPT	VU14 NPT	see reference table	1/4"	Z	60,0	2,36	B	19,0	0,75	Y	21,9	0,86	0,09	0,20
VUZ38 NPT	VU38 NPT	see reference table	3/8"	Z	70,0	2,76	B	24,0	0,94	Y	27,7	1,09	0,18	0,39
VUZ12 NPT	VU12 NPT	see reference table	1/2"	Z	77,0	3,03	B	30,0	1,18	Y	34,6	1,36	0,30	0,66
VUZ34 NPT	VU34 NPT	see reference table	3/4"	Z	90,0	3,54	B	36,0	1,42	Y	41,6	1,64	0,49	1,08
VUZ100 NPT	VU100 NPT	see reference table	1"	Z	106,0	4,17	B	45,0	1,77	Y	52,0	2,05	0,87	1,92
VUZ114 NPT	VU114 NPT	see reference table	1-1/4"	Z	125,0	4,92	B	55,0	2,17	Y	63,5	2,50	1,49	3,28
VUZ112 NPT	VU112 NPT	see reference table	1-1/2"	Z	140,0	5,51	B	65,0	2,56	Y	75,1	2,96	2,43	5,35
VUZ200 NPT	VU200 NPT	see reference table	2"	Z	160,0	6,30	B	75,0	2,95	Y	86,6	3,41	3,13	6,90

Port description: FEMALE THREAD SAE (ISO 11926-1 & SAE J1926-1)

Descriptive Code		Item Code	PORT (A)	Overall Length			Wrench Flat			Diameter			Weight	
VUZ	VU				mm	in		mm	in		mm	in	kg	lb
VUZ14 SAE	VU14 SAE	see reference table	7/16-20UNF	Z	60,0	2,36	B	19,0	0,75	Y	21,9	0,86	0,10	0,22
VUZ38 SAE	VU38 SAE	see reference table	9/16-18UNF	Z	70,0	2,76	B	24,0	0,94	Y	27,7	1,09	0,19	0,42
VUZ12 SAE	VU12 SAE	see reference table	3/4-16UNF	Z	77,0	3,03	B	30,0	1,18	Y	34,6	1,36	0,32	0,69
VUZ34 SAE	VU34 SAE	see reference table	1-1/16-12UN	Z	94,0	3,70	B	36,0	1,42	Y	41,6	1,64	0,49	1,08
VUZ100 SAE	VU100 SAE	see reference table	1-5/16-12UN	Z	106,0	4,17	B	45,0	1,77	Y	52,0	2,05	0,87	1,92
VUZ114 SAE	VU114 SAE	see reference table	1-5/8-12UN	Z	125,0	4,92	B	55,0	2,17	Y	63,5	2,50	1,49	3,28
VUZ112 SAE	VU112 SAE	see reference table	1-7/8-12UN	Z	140,0	5,51	B	65,0	2,56	Y	75,1	2,96	2,41	5,31
VUZ200 SAE	VU200 SAE	see reference table	2-1/2-12UN	Z	160,0	6,30	B	75,0	2,95	Y	86,6	3,41	3,00	6,60

STUCCHI Quick Couplings Catalog - December 2024 - All right reserved.
Texts, data and illustrations mentioned in this catalogue may be changed by Stucchi at any time, without notice; always refer to the version uploaded on the English version of stucchigroup.com/en website for the latest release. In case of doubt, please contact Stucchi technical service.

BOPPRODUCTS LIST

Stucchi®

BLOW OUT PREVENTION:
Our products are fire tested and Lloyd certified in accordance with API 16D and the EUB Directive #36. This rigorous testing ensures that our products meet the highest standards for Blow Out Prevention, providing reliability and safety in critical situations.
The product table below is comprised of standard items that have successfully passed the stringent testing requirements.

VEP-P Series

BSP THREAD				
Body size	Item Code	Product name	BOP max operating pressure	
			MPa	psi
3/8"	807200002	F VEP9P 3/8 BSP	34,5	5000
3/8"	807200003	M VEP9P 3/8 BSP	34,5	5000
3/8"	807200004	F VEP9P 1/2 BSP	34,5	5000
3/8"	807200005	M VEP9P 1/2 BSP	34,5	5000
3/8"	811900002	F VEP9PZN 3/8 BSP	34,5	5000
3/8"	811900003	M VEP9PZN 3/8 BSP	34,5	5000
3/8"	811900014	F VEP9PZN 1/2 BSP	34,5	5000
3/8"	811900015	M VEP9PZN 1/2 BSP	34,5	5000
1/2"	807200006	F VEP13P 1/2 BSP	34,5	5000
1/2"	807200007	M VEP13P 1/2 BSP	34,5	5000
1/2"	807200008	F VEP13P 3/4 BSP	34,5	5000
1/2"	807200009	M VEP13P 3/4 BSP	34,5	5000
1/2"	811900004	F VEP13PZN 1/2 BSP	34,5	5000
1/2"	811900005	M VEP13PZN 1/2 BSP	34,5	5000
1/2"	811900016	F VEP13PZN 3/4 BSP	34,5	5000
1/2"	811900017	M VEP13PZN 3/4 BSP	34,5	5000
5/8"	807200010	F VEP15P 3/4 BSP	34,5	5000
5/8"	807200011	M VEP15P 3/4 BSP	34,5	5000
5/8"	811900006	F VEP15PZN 3/4 BSP	34,5	5000
5/8"	811900007	M VEP15PZN 3/4 BSP	34,5	5000
3/4"	807200012	F VEP17P 1 BSP	34,5	5000
3/4"	807200013	M VEP17P 1 BSP	34,5	5000
3/4"	807200024	F VEP17P 3/4 BSP	34,5	5000
3/4"	807200025	M VEP17P 3/4 BSP	34,5	5000
3/4"	811900008	F VEP17PZN 1 BSP	34,5	5000
3/4"	811900009	M VEP17PZN 1 BSP	34,5	5000
1"	807200014	F VEP21P 1-1/4 BSP	34,5	5000
1"	807200015	M VEP21P 1-1/4 BSP	34,5	5000
1"	807200020	F VEP21P 1 BSP	34,5	5000
1"	807200021	M VEP21P 1 BSP	34,5	5000
1"	811900010	F VEP21PZN 1-1/4 BSP	34,5	5000
1"	811900011	M VEP21PZN 1-1/4 BSP	34,5	5000
1-1/2"	807200016	F VEP30P 1-1/2 BSP	34,5	5000
1-1/2"	807200017	M VEP30P 1-1/2 BSP	34,5	5000
1-1/2"	807200022	F VEP30P 1-1/4 BSP	34,5	5000
1-1/2"	807200023	M VEP30P 1-1/4 BSP	34,5	5000
1-1/2"	811900012	F VEP30PZN 1-1/2 BSP	34,5	5000
1-1/2"	811900013	M VEP30PZN 1-1/2 BSP	34,5	5000

NPT THREAD				
Body size	Item Code	Product name	BOP max operating pressure	
			MPa	psi
3/8"	807201002	F VEP9P 3/8 NPT	34,5	5000
3/8"	807201003	M VEP9P 3/8 NPT	34,5	5000
3/8"	807201004	F VEP9P 1/2 NPT	34,5	5000
3/8"	807201005	M VEP9P 1/2 NPT	34,5	5000
3/8"	811901002	F VEP9PZN 3/8 NPT	34,5	5000
3/8"	811901003	M VEP9PZN 3/8 NPT	34,5	5000
1/2"	807201006	F VEP13P 1/2 NPT	34,5	5000
1/2"	807201007	M VEP13P 1/2 NPT	34,5	5000
1/2"	807201008	F VEP13P 3/4 NPT	34,5	5000
1/2"	807201009	M VEP13P 3/4 NPT	34,5	5000
1/2"	811901004	F VEP13PZN 1/2 NPT	34,5	5000
1/2"	811901005	M VEP13PZN 1/2 NPT	34,5	5000
5/8"	807201010	F VEP15P 3/4 NPT	34,5	5000
5/8"	807201011	M VEP15P 3/4 NPT	34,5	5000
5/8"	811901006	F VEP15PZN 3/4 NPT	34,5	5000
5/8"	811901007	M VEP15PZN 3/4 NPT	34,5	5000
3/4"	807201020	F VEP17P 3/4 NPT	34,5	5000
3/4"	807201021	M VEP17P 3/4 NPT	34,5	5000
3/4"	811901018	F VEP17PZN 3/4 NPT	34,5	5000
3/4"	811901019	M VEP17PZN 3/4 NPT	34,5	5000
3/4"	807201012	F VEP17P 1 NPT	34,5	5000
3/4"	807201013	M VEP17P 1 NPT	34,5	5000
3/4"	811901008	F VEP17PZN 1 NPT	34,5	5000
3/4"	811901009	M VEP17PZN 1 NPT	34,5	5000
1"	807201022	F VEP21P 1 NPT	34,5	5000
1"	807201023	M VEP21P 1 NPT	34,5	5000
1"	811901020	F VEP21PZN 1 NPT	34,5	5000
1"	811901021	M VEP21PZN 1 NPT	34,5	5000
1"	807201014	F VEP21P 1-1/4 NPT	34,5	5000
1"	807201015	M VEP21P 1-1/4 NPT	34,5	5000
1-1/2"	807201016	F VEP30P 1-1/2 NPT	34,5	5000
1-1/2"	807201017	M VEP30P 1-1/2 NPT	34,5	5000

BOPPRODUCTS LIST

Stucchi®

VEP-P Series

SAE THREAD				
Body size	Item Code	Product name	BOP max operating pressure	
			MPa	psi
5/8"	807204010	F VEP15P 3/4 SAE	34,5	5000
5/8"	807204011	M VEP15P 3/4 SAE	34,5	5000
5/8"	811904006	F VEP15PZN 3/4 SAE	34,5	5000
5/8"	811904007	M VEP15PZN 3/4 SAE	34,5	5000
3/4"	807204012	F VEP17P 1 SAE	34,5	5000
3/4"	807204013	M VEP17P 1 SAE	34,5	5000
3/4"	807204022	F VEP17P 3/4 SAE	34,5	5000
3/4"	807204023	M VEP17P 3/4 SAE	34,5	5000
1"	807204014	F VEP21P 1-1/4 SAE	34,5	5000
1"	807204015	M VEP21P 1-1/4 SAE	34,5	5000
1"	807204024	F VEP21P 1 SAE	34,5	5000
1"	807204025	M VEP21P 1 SAE	34,5	5000
1-1/2"	807204016	F VEP30P 1-1/2 SAE	34,5	5000
1-1/2"	807204017	M VEP30P 1-1/2 SAE	34,5	5000
1-1/2"	807204026	F VEP30P 1-1/4 SAE	34,5	5000
1-1/2"	807204027	M VEP30P 1-1/4 SAE	34,5	5000

ORFS/ORFS BULK HEAD				
Body size	Item Code	Product name	BOP max operating pressure	
			MPa	psi
5/8"	807213006	F VEP15P 3/4 ORFS	34,5	5000
5/8"	807213007	M VEP15P 3/4 ORFS	34,5	5000
5/8"	807213020	F VEP15P 3/4 ORFS BH	34,5	5000
5/8"	807213021	M VEP15P 3/4 ORFS BH	34,5	5000
3/4"	807213008	F VEP17P 1 ORFS	34,5	5000
3/4"	807213009	M VEP17P 1 ORFS	34,5	5000
3/4"	807213022	F VEP17P 1 ORFS BH	34,5	5000
3/4"	807213023	M VEP17P 1 ORFS BH	34,5	5000
1"	807213010	F VEP21P 1-1/4 ORFS	34,5	5000
1"	807213011	M VEP21P 1-1/4 ORFS	34,5	5000
1"	807213024	F VEP21P 1-1/4 ORFS BH	34,5	5000
1"	807213025	M VEP21P 1-1/4 ORFS BH	34,5	5000

BOPPRODUCTS LIST

Stucchi®

VEP-HD Series

BSP THREAD				
Body size	Item Code	Product name	BOP max operating pressure	
			MPa	psi
5/8"	808100010	F VEP15HD 3/4 BSP	34,5	5000
5/8"	808100011	M VEP15HD 3/4 BSP	34,5	5000
3/4"	808100012	F VEP17HD 1 BSP	34,5	5000
3/4"	808100013	M VEP17HD 1 BSP	34,5	5000
3/4"	808100018	F VEP17HD 3/4 BSP	34,5	5000
3/4"	808100019	M VEP17HD 3/4 BSP	34,5	5000
3/4"	812200008	F VEP17HDZN 3/4 BSP	34,5	5000
3/4"	812200009	M VEP17HDZN 3/4 BSP	34,5	5000
3/4"	812200012	F VEP17HDZN 1 BSP	34,5	5000
3/4"	812200013	M VEP17HDZN 1 BSP	34,5	5000
1"	808100014	F VEP21HD 1-1/4 BSP	34,5	5000
1"	808100015	M VEP21HD 1-1/4 BSP	34,5	5000
1"	808100020	F VEP21HD 1 BSP	34,5	5000
1"	808100021	M VEP21HD 1 BSP	34,5	5000
1"	812200014	F VEP21HDZN 1-1/4 BSP	34,5	5000
1"	812200015	M VEP21HDZN 1-1/4 BSP	34,5	5000
1-1/2"	808100016	F VEP30HD 1-1/2 BSP	34,5	5000
1-1/2"	808100017	M VEP30HD 1-1/2 BSP	34,5	5000
1-1/2"	808100022	F VEP30HD 1-1/4 BSP	34,5	5000
1-1/2"	808100023	M VEP30HD 1-1/4 BSP	34,5	5000
1-1/2"	812200016	F VEP30HDZN 1-1/2 BSP	34,5	5000
1-1/2"	812200017	M VEP30HDZN 1-1/2 BSP	34,5	5000
1-1/2"	812200018	F VEP30HDZN 1-1/4 BSP	34,5	5000
1-1/2"	812200019	M VEP30HDZN 1-1/4 BSP	34,5	5000

NPT THREAD				
Body size	Item Code	Product name	BOP max operating pressure	
			MPa	psi
5/8"	808101010	F VEP15HD 3/4 NPT	34,5	5000
5/8"	808101011	M VEP15HD 3/4 NPT	34,5	5000
3/4"	808101012	F VEP17HD 1 NPT	34,5	5000
3/4"	808101013	M VEP17HD 1 NPT	34,5	5000
3/4"	808101018	F VEP17HD 3/4 NPT	34,5	5000
3/4"	808101019	M VEP17HD 3/4 NPT	34,5	5000
1"	808101014	F VEP21HD 1-1/4 NPT	34,5	5000
1"	808101015	M VEP21HD 1-1/4 NPT	34,5	5000
1"	808101020	F VEP21HD 1 NPT	34,5	5000
1"	808101021	M VEP21HD 1 NPT	34,5	5000
1-1/2"	808101016	F VEP30HD 1-1/2 NPT	34,5	5000
1-1/2"	808101017	M VEP30HD 1-1/2 NPT	34,5	5000

SAE THREAD				
Body size	Item Code	Product name	BOP max operating pressure	
			MPa	psi
5/8"	808104010	F VEP15HD 3/4 SAE	34,5	5000
5/8"	808104011	M VEP15HD 3/4 SAE	34,5	5000
5/8"	812204010	F VEP15HDZN 3/4 SAE	34,5	5000
5/8"	812204011	M VEP15HDZN 3/4 SAE	34,5	5000
3/4"	808104012	F VEP17HD 1 SAE	34,5	5000
3/4"	808104013	M VEP17HD 1 SAE	34,5	5000
3/4"	812204012	F VEP17HDZN 1 SAE	34,5	5000
3/4"	812204013	M VEP17HDZN 1 SAE	34,5	5000
1"	808104014	F VEP21HD 1-1/4 SAE	34,5	5000
1"	808104015	M-VEP21HD 1-1/4 SAE	34,5	5000
1"	808104020	F VEP21HD 1 SAE	34,5	5000
1"	808104021	M VEP21HD 1 SAE	34,5	5000
1"	812204014	F VEP21HDZN 1-1/4 SAE	34,5	5000
1"	812204015	M VEP21HDZN 1-1/4 SAE	34,5	5000
1-1/2"	808104016	F VEP30HD 1-1/2 SAE	34,5	5000
1-1/2"	808104017	M VEP30HD 1-1/2 SAE	34,5	5000
1-1/2"	808104022	F VEP30HD 1-1/4 SAE	34,5	5000
1-1/2"	808104023	M VEP30HD 1-1/4 SAE	34,5	5000
1-1/2"	812204016	F VEP30HDZN 1-1/2 SAE	34,5	5000
1-1/2"	812204017	M VEP30HDZN 1-1/2 SAE	34,5	5000

Stucchi®

VEP-HD Series

ORFS/ORFS BULK HEAD				
Body size	Item Code	Product name	BOP max operating pressure	
			MPa	psi
3/4"	808124012	F VEP17HD 1 FH CODE62	34,5	5000
3/4"	808124013	M VEP17HD 1 FH CODE62	34,5	5000
3/4"	808124020	F VEP17HD 1 FPU CODE62 7/16-14UNC	34,5	5000
3/4"	808124021	M VEP17HD 1 FPU CODE62 7/16-14UNC	34,5	5000
1"	808124014	F VEP21HD 1-1/4 FH CODE62	34,5	5000
1"	808124015	M VEP21HD 1-1/4 FH CODE62	34,5	5000
1"	808124018	F VEP21HD 1 FPM CODE62 M12	34,5	5000
1"	808124019	M VEP21HD 1 FPM CODE62 M12	34,5	5000
1"	808124022	F VEP21HD 1-1/4 FPU CODE62 1/2-13UNC	34,5	5000
1"	808124023	M VEP21HD 1-1/4 FPU CODE62 1/2-13UNC	34,5	5000
1"	808124026	F VEP21HD 1-1/4 FPM CODE62 M14	34,5	5000
1"	808124027	M VEP21HD 1-1/4 FPM CODE62 M14	34,5	5000
1"	812224018	F VEP21HDZN 1 FPM CODE62 M12	34,5	5000
1"	812224019	M VEP21HDZN 1 FPM CODE62 M12	34,5	5000
1-1/2"	808124016	F VEP30HD 1-1/2 FH CODE62	34,5	5000
1-1/2"	808124017	M VEP30HD 1-1/2 FH CODE62	34,5	5000
1-1/2"	808124024	F VEP30HD 1-1/2 FPU CODE62 5/8-11UNC	34,5	5000
1-1/2"	808124025	M VEP30HD 1-1/2 FPU CODE62 5/8-11UNC	34,5	5000
1-1/2"	808124028	F VEP30HD 1-1/2 FPM CODE62 M16	34,5	5000
1-1/2"	808124029	M VEP30HD 1-1/2 FPM CODE62 M16	34,5	5000
1-1/2"	808124034	F VEP30HD 1-1/4 FPM CODE62 M14	34,5	5000
1-1/2"	808124035	M VEP30HD 1-1/4 FPM CODE62 (A631) M14	34,5	5000
1-1/2"	808124036	F VEP30HD 1-1/4 FPU CODE62 1/2-13UNC	34,5	5000
1-1/2"	808124037	M VEP30HD 1-1/4 FPU CODE62 1/2-13UNC	34,5	5000
1-1/2"	808124038	F VEP30HD 1-1/4 FH CODE62	34,5	5000
1-1/2"	808124039	M VEP30HD 1-1/4 FH CODE62 (A631)	34,5	5000
1-1/2"	808124040	F VEP30HD 1-1/4 FPM CODE62 M12	34,5	5000
1-1/2"	808124041	M VEP30HD 1-1/4 FPM CODE62 M12	34,5	5000
1-1/2"	812224016	F VEP30HDZN 1-1/2 FH CODE62	34,5	5000
1-1/2"	812224017	M VEP30HDZN 1-1/2 FH CODE62	34,5	5000
1-1/2"	812224024	F VEP30HDZN 1-1/2 FPU CODE62 5/8-11UNC	34,5	5000
1-1/2"	812224025	M VEP30HDZN 1-1/2 FPU CODE62 5/8-11UNC	34,5	5000
1-1/2"	812224038	F VEP30HDZN 1-1/4 FH CODE62	34,5	5000
1-1/2"	812224039	M VEP30HDZN 1-1/4 FH CODE62	34,5	5000
1-1/2"	812224040	F VEP30HDZN 1-1/4 FPM CODE62 M12	34,5	5000
1-1/2"	812224041	M VEP30HDZN 1-1/4 FPM CODE62 M12	34,5	5000

BOPPRODUCTS LIST

Stucchi®

VP-P Series

BSP THREAD				
Body size	Item Code	Product name	BOP max operating pressure	
			MPa	psi
5/8"	807300010	F VP15P 3/4 BSP	34,5	5000
5/8"	807300011	M VP15P 3/4 BSP	34,5	5000
3/4"	807300012	F VP17P 1 BSP	34,5	5000
3/4"	807300013	M VP17P 1 BSP	34,5	5000
3/4"	807300018	F VP17P 3/4 BSP	34,5	5000
3/4"	807300019	M VP17P 3/4 BSP	34,5	5000
1"	807300014	F VP21P 1-1/4 BSP	34,5	5000
1"	807300015	M VP21P 1-1/4 BSP	34,5	5000
1"	807300022	F VP21P 1 BSP	34,5	5000
1"	807300023	M VP21P 1 BSP	34,5	5000
1-1/2"	807300016	F VP30P 1-1/2 BSP	34,5	5000
1-1/2"	807300017	M VP30P 1-1/2 BSP	34,5	5000
1-1/2"	807300024	F VP30P 1-1/4 BSP	34,5	5000
1-1/2"	807300025	M VP30P 1-1/4 BSP	34,5	5000

SAE THREAD				
Body size	Item Code	Product name	BOP max operating pressure	
			MPa	psi
5/8"	807304010	F VP15P 3/4 SAE	34,5	5000
5/8"	807304011	M VP15P 3/4 SAE	34,5	5000
3/4"	807304012	F VP17P 1 SAE	34,5	5000
3/4"	807304013	M VP17P 1 SAE	34,5	5000
1"	807304014	F VP21P 1-1/4 SAE	34,5	5000
1"	807304015	M VP21P 1-1/4 SAE	34,5	5000
1-1/2"	807304016	F VP30P 1-1/2 SAE	34,5	5000
1-1/2"	807304017	M VP30P 1-1/2 SAE	34,5	5000

NPT THREAD				
Body size	Item Code	Product name	BOP max operating pressure	
			MPa	psi
5/8"	807301010	F VP15P 3/4 NPT	34,5	5000
5/8"	807301011	M VP15P 3/4 NPT	34,5	5000
3/4"	807301012	F VP17P 1 NPT	34,5	5000
3/4"	807301013	M VP17P 1 NPT	34,5	5000
1"	807301014	F VP21P 1-1/4 NPT	34,5	5000
1"	807301015	M VP21P 1-1/4 NPT	34,5	5000
1-1/2"	807301016	F VP30P 1-1/2 NPT	34,5	5000
1-1/2"	807301017	M VP30P 1-1/2 NPT	34,5	5000

IRC Series

BSP THREAD				
Body size	Item Code	Product name	BOP max operating pressure	
			MPa	psi
1"	812100008	F IRC100ZN BSP	20,7	3000
1"	812100009	M IRC100ZN BSP	20,7	3000
1"	812100016	F IRC100PCZN BSP	20,7	3000
1"	812100017	M IRC100PCZN BSP	20,7	3000

NPTF THREAD				
Body size	Item Code	Product name	BOP max operating pressure	
			MPa	psi
1"	812102008	F IRC100ZN NPTF	20,7	3000
1"	812102009	M IRC100ZN NPTF	20,7	3000
1"	812102016	F IRC100PCZN NPTF	20,7	3000
1"	812102017	M IRC100PCZN NPTF	20,7	3000

BOPPRODUCTS LIST

Stucchi®

VOF Series

BSP THREAD				
Body size	Item Code	Product name	BOP max operating pressure	
			MPa	psi
3/4"	811200002	F/NIPPLE VOF34 BSP	34,5	5000
3/4"	811200003	M/COUPLER VOF34 BSP	34,5	5000
1"	811200000	F/NIPPLE VOF100 BSP	34,5	5000
1"	811200001	M/COUPLER VOF100 BSP	34,5	5000
1-1/4"	811200004	F/NIPPLE VOF114 BSP	34,5	5000
1-1/4"	811200005	M/COUPLER VOF114 BSP	34,5	5000
1-1/2"	811200006	F/NIPPLE VOF112 BSP	34,5	5000
1-1/2"	811200007	M/COUPLER VOF112 BSP	34,5	5000
2"	811200008	F/NIPPLE VOF200 BSP	33,3	4875
2"	811200009	M/COUPLER VOF200 BSP	33,3	4875

NPT THREAD				
Body size	Item Code	Product name	BOP max operating pressure	
			MPa	psi
3/4"	811201002	F/NIPPLE VOF34 NPT	34,5	5000
3/4"	811201003	M/COUPLER VOF34 NPT	34,5	5000
1"	811201000	F/NIPPLE VOF100 NPT	34,5	5000
1"	811201001	M/COUPLER VOF100 NPT	34,5	5000
1-1/4"	811201004	F/NIPPLE VOF114 NPT	34,5	5000
1-1/4"	811201005	M/COUPLER VOF114 NPT	34,5	5000
1-1/2"	811201006	F/NIPPLE VOF112 NPT	34,5	5000
1-1/2"	811201007	M/COUPLER VOF112 NPT	34,5	5000
2"	811201008	F/NIPPLE VOF200 NPT	33,3	4875
2"	811201009	M/COUPLER VOF200 NPT	33,3	4875

VOFX Series

BSP THREAD				
Body size	Item Code	Product name	BOP max operating pressure	
			MPa	psi
3/4"	811200050	F/NIPPLE VOFX34 BSP	20,7	3000
3/4"	811200051	M/COUPLER VOFX34 BSP	20,7	3000
1"	811200052	F/NIPPLE VOFX100 BSP	20,7	3000
1"	811200053	M/COUPLER VOFX100 BSP	20,7	3000
1-1/4"	811200054	F/NIPPLE VOFX114 BSP	20,7	3000
1-1/4"	811200055	M/COUPLER VOFX114 BSP	20,7	3000
1-1/2"	811200056	F/NIPPLE VOFX112 BSP	20,7	3000
1-1/2"	811200057	M/COUPLER VOFX112 BSP	20,7	3000
2"	811200058	F/NIPPLE VOFX200 BSP	20,7	3000
2"	811200059	M/COUPLER VOFX200 BSP	20,7	3000

NPT THREAD				
Body size	Item Code	Product name	BOP max operating pressure	
			MPa	psi
3/4"	811201050	F/NIPPLE VOFX34 NPT	20,7	3000
3/4"	811201051	M/COUPLER VOFX34 NPT	20,7	3000
1"	811201052	F/NIPPLE VOFX100 NPT	20,7	3000
1"	811201053	M/COUPLER VOFX100 NPT	20,7	3000
1-1/4"	811201054	F/NIPPLE VOFX114 NPT	20,7	3000
1-1/4"	811201055	M/COUPLER VOFX114 NPT	20,7	3000
1-1/2"	811201056	F/NIPPLE VOFX112 NPT	20,7	3000
1-1/2"	811201057	M/COUPLER VOFX112 NPT	20,7	3000
2"	811201058	F/NIPPLE VOFX200 NPT	20,7	3000
2"	811201059	M/COUPLER VOFX200 NPT	20,7	3000

Multicouplings

Stucchi®

The multicoupling plate is an innovative and modular solution for any application requiring connection and disconnection of several hydraulic, electrical and pneumatic lines. All the lines are simultaneously connected and disconnected by a safe, simple and quick movement requiring low effort even under residual pressure.

The multicouplings are equipped with flat face couplings that are designed to reduce contamination entering into a circuit, eliminate spillage, and reduce air inclusion during connection and disconnection of the couplings.

Multicouplings

Stucchi offers a flexible and wide range of configurations to satisfy the diverse applications

DP&GR series for hydraulic oil application (up to 10 lines).

DP

Valving style: Flat face
Interchange: Stucchi profile
Sealing description: Nitrile NBR
Available sizes: From 3/8” to 1”
Flow rate: Up to 378 l/min
Material:
Carbon steel, Aluminium / Cr3
Connection under pressure: Allowed

GR

Valving style: Flat face
Interchange: Stucchi profile
Sealing description: Nitrile NBR
Available sizes: From 3/8” to 1”
Flow rate: Up to 378 l/min
Material: Carbon steel, Brass / Cr3
Connection under pressure: Allowed

GRE Series for industrial low pressure application (up to 18 lines).

GRE

Valving style: Flat face
Interchange: Stucchi profile
Sealing description: Nitrile NBR
Available sizes: From 3/8” to 1/2”
Operating pressure: Up to 10 bar
Flow rate: Up to 90 l/min
Material: Aluminium

For more information please contact Stucchi Technical Support or visit: stucchigroup.com

Instructions and warning

Stucchi®

The incorrect use of products can cause malfunctioning and safety risks.

Therefore, before using Stucchi products, we strongly recommend reading and following the "general instructions for selection and use of the products" and the "instructions of use" of the specified product intending to use (to be asked to the Stucchi technical service).

⚠ WARNING

A defect, a wrong choice or an improper use of products, can cause injury to persons, animals and objects.
Connection under pressure are under residual pressure.
Never connect or disconnect with dynamic pressure (e.g. pump on).
Make sure that the medium used is compatible with seal and material as indicated for each series.
The interchangeability is mentioned under the assumption that the manufacturer of the considered products has not changed any dimension.
It is mandatory to carefully read and closely follow the instructions before selecting or using any Stucchi products.
Always refer to the version uploaded in the Instructions and warnings section of stucchigroup.com website for the latest release.
In case of doubt or for specific product-related instructions, please contact Stucchi technical service.

1.0 GENERAL INSTRUCTIONS

1.1 Context
These safety instructions form a supplement and shall be used as one document together with the technical documentation related to the specified product to be installed.

1.2 Safeguarding
It is recommended that all systems and equipment be protected so that safety of people, animals and objects will be guaranteed in case of defect of the product.

1.3 Distribution of the instruction
A copy of these instructions has to be supplied to every person responsible for the selection and/or usage of the products.

1.4 Responsibility of the user
Due to the most various range of operating use and conditions of the products, Stucchi does not guarantee that every product can be used for every application.
These safety instructions don't analyse all technical parameters that have to be considered by selecting the products.

The end user, through their own analyses and tests, is responsible for the following:
- Final selection of the product
- Ascertainment that the requirements of the end user are satisfied and that the predicted use does not present a safety risk.
- Supply of all warnings regarding the safety of the equipment on which Stucchi products will be used.
- Correct disposal of the product at the end of its life, see paragraph 'disposal instructions'.

2.0 INSTRUCTIONS FOR SELECTION OF THE PRODUCT

2.1 Application fields
Check that the product is suitable for the specific application.
In case of doubt, contact the Stucchi Technical Support.

2.2 Type of product
Select the type of product most suitable for the working environment.
Flat face couplings: suitable for working environments where it is necessary to reduce to minimum the fluid loss during disconnection and to avoid dirt inclusion during connection.
Screw couplings: they are suitable for high working pressure and frequent impulses; they are connectable with high residual pressure.
Poppet valve couplings: widely used in the agricultural field.

2.3 Materials and treatments
Make sure that the materials and treatments of the product conform to the exposed working environment.

2.4 Dimensions
Choose the product with dimensions and flow suited to the circuit in order to avoid over stress damaging the product.

2.5 Flow inversion
For application with flow inversion during operation, use only products designed for that scope.
Flow inversion during operation generates turbulences inside the product that can cause damage on the components.

2.6 Thread
Choose the product with thread suitable for the application.
For high pressure conditions, over 50 MPa, products with taper thread NPT are recommended.

2.7 Type of medium
Verify that the seals of the product are compatible with the medium used in case of doubts please contact Stucchi Technical Support.
Make sure that other not compatible fluids do not come in contact with the seals in case of maintenance.
Do not use the products with inflammable, explosive or dangerous fluids without approval of Stucchi.

2.8 Medium temperature
Verify that the working temperature is within the functional limits of the coupling and its seals.

The couplings must not be connected and disconnected with a temperature higher than 80 degrees Celsius.
In case of connection-disconnection with temperature higher than 30 Celsius degrees, the operator must be protected using gloves and/or other devices to prevent any leakage or splashing causing injury to himself, persons, animals and objects.

2.9 Environment temperature
With extreme temperature conditions, the mechanical resistance of the products changes.
The use and handling of couplings in case of ice can be difficult due to ice inclusion in the blocking mechanisms.
Use protective gloves in applications with hot and cold operating temperature.
Do not overheat the coupling in a closed circuit, as it may lead to overpressure and consequential burst or damage.

2.10 Pressure
Verify always if the maximum working pressure of the product is the same or higher than the pressure peaks of the application.

Do not make confusion between the burst pressure and the maximum working pressure, so do not use the value of the burstpressure for your selection.

Check that the number of impulse cycles which the product has been tested is compatible with the impulse number of the application.

2.11 Residual pressure
For connection and disconnection with residual pressure use only couplings that are developed for this scope.

The term 'internal residual pressure' means: the static pressure retained in the system, which has not be generated by a working pump or other accessories in movement.

The structure of the machine or plant in which these products are placed, must be suitable to limit accidental splashing and fluid losses caused by wrong usage or malfunctioning of the product, in order to avoid direct and indirect damage on persons, animals or objects.
The temperature of the fluid must not exceed the limits mentioned in point 2.8

2.12 Connection frequency
It is important to know the connection frequency with which the coupling is used, while this has significant influence on the life of both springs and seals.

An under-estimated value can cause unexpected fluid loss.

2.13 Safety device
If used in environments or machines in strict closeness at persons, animals or objects (1 meter), within easy accidental disconnection conditions, it is highly recommended to use ball locked couplings with security system or screw couplings and to make sure that the preventive disconnection mechanism is correctly screwed together.

2.14 Mechanical loads
Side loads, mechanical stresses in general and vibrations reduce significantly the life of the product and are often the cause of sudden damages.

It is recommended to assemble quick release couplings without risks of mechanical damage and over-loading caused by stress generated in flexible or rigid hoses and to assemble quick release couplings on hoses with proper dimensions referred to the nominal passage of the quick release coupling.

2.15 Rotation
In case of applications with rotation use only products developed for this scope.
In case of rotation between male and female part it is necessary to inform in advance Stucchi Technical Support or to provide the connection with swivel joints suitable for this scope.

2.16 Special applications
You should be advised to take particular attention to special applications (such as vacuum use, high temperature, etc...).

Please consult Stucchi Technical Support who is able to give instructions concerning the use of Stucchi products.

Do not use Stucchi products in nuclear, aircraft or military field; do not use Stucchi products in explosive environment or with inflammable, explosive or dangerous fluid. In this cases contact Stucchi Technical Support for assistance.

3.0 INSTRUCTIONS FOR STOCK PRESERVATION

For a correct preservation of the product and in order to avoid damage before even starting to use the product read carefully the following instructions.

3.1 Packaging
The products have to be kept in closed packaging to protect the components, mainly the seals, from dust and ultraviolet rays.

3.2 Environments
The products shall be kept in environments with low percentage of humidity, no condensation, no salt, protected from atmospheric factors, far away from heating devices and magnetic fields. Eliminate equipment that can produce ozone, as this element is extremely destructive for the seals.

3.3 Protection cap
The protection cap assembled on the thread has to be removed at the moment of the product installation only.

3.4 Special packaging
In case of requests for special packaging contact the customer service.

4.0 INSTALLATION INSTRUCTIONS

4.1 Pre Installation inspections
Before installation of the product it is necessary to inspect it visually and to verify if the part number and description of the product refers to the one requested.

4.2 Hose size
The optimal is to use the hoses having the same sizes as the coupling body, can be used the hoses having one size more (step up) than the coupling but not bigger otherwise they can overstress the coupling with risk of failure.

4.3 Hose assembling
In case of single coupling one part (female or male) can be assembled directly on the rigid tube, but the other part shall be assembled on the flexible hose in order to allow an easy connection and absorb better the vibration and mechanical stress.
In case of the multicoupling both parts (fixed and mobile) shall be assembled on the flexible hoses to avoid the misalignment of the couplings. Once connected the flexible hose should create a right radius according to the hose manufacturer specifications, in this way the connection/disconnection of the couplings takes place in easy way and aligned position.

4.4 Side load
Don't apply radial/axial loads that create misalignment of the couplings during connection/disconnection and can cause damage on the connection and sealing parts.

4.5 Fitting assembling
Use fittings and sealing systems conform to the thread of the product only.
To install and remove the couplings use proper tools and act only on flat spanner surfaces of the coupling. Do not use improper tools (spanner for hoses, bench vice, pincer etc.) while these can cause damage on the coupling with malfunction as result.
Use the tightening torque stabilized by the norm to screw the fittings

4.6 Positioning of the coupling
It is suggested to install the couplings in such way that they can easy be connected and disconnected, reducing to the minimum the forces and risks for the operator.
It's suggested to install the coupling not exposed in order to protect if from collision with other parts. It is suggested to protect the couplings using shelters and protections (see sector norms) to guarantee the security and to prevent damage.

5.0 INSTRUCTIONS OF USE

5.1 Modality of use
The modality of use changes in accordance to the type of product used.

For every type of product, the modality of use described in the catalogue or the specific usage instructions supplied by Stucchi have to be carefully followed .The system has to be immediately stopped and the product should be replaced whenever one of the following conditions will occur:

- Visible damage, damaged parts of the product, cracks and corrosion.
- Difficulties in connection and disconnection generated by too high force compared to the data mentioned in the catalogue.
- Presence of leakage.
- Malfunctioning of the valve.

In the above mentioned cases please contact Stucchi Technical Support for information.

5.2 Connection / Disconnection
Before connecting, the parts of the couplings involved in the connection have to be cleaned. Connection with dirty parts may cause damage such as unexpected and dangerous leakage on the coupling.
Another consequence of dirt is contamination of the system.
Do connect and disconnect the coupling only as indicated in the modality of use: do not use other unsuitable tools.
A loss of fluid contained in the circuit may occur during the disconnection of the coupling. The approximate spillage values are shown in the catalog. It is recommended to pay maximum attention during the disconnection phase and to activate the necessary precautions to avoid the dispersion of fluids in the environment.

5.3 Mechanical damage
The product shall not be exposed to mechanical damages while they can cause damage and malfunctioning.
Do not use tools to open the valves to release residual pressure trapped in the circuit.

5.4 Circuits cleaning
Use the products in clean circuits.
Dirt can damage components of the product and cause malfunctioning.

5.5 Protection caps
Use anti-dust caps when coupling is disconnected to avoid dirt and contamination and to protect the surface from accidental damage caused by collisions.

5.6 Use of semi-couplings of other manufacturers.
Do not connect Stucchi half-couplings with other not compatible half-couplings.
In case of connection of a Stucchi half-coupling with a half-coupling from another manufacturer, do not exceed the lowest nominal pressure of the two products.

6.0 MAINTENANCE INSTRUCTIONS
The good functional of product is often compromised by a lack of maintenance.
To avoid unexpected damage that can cause times of arrest and safety risks it is necessary to apply maintenance periodically.

The period dedicated to the maintenance of the product has to be defined by the user and depends on the type of application and on the working conditions the product is exposed to.

6.1 Ordinary - Preventive maintenance
First, the product should be well cleaned and the area where it is installed as well, then you should check and verify the following steps:

- Absence of breakage or various damage on the products.
- Absence of leakage in general.
- Correctness of tightening torque of the adapters.
- Check the level of circuit contamination.
- The connected parts or the parts in movement should be greased with grease compatible with the seals assembled in the products.
- The replacement of the coupling should be planned in accordance with the requested endurance for the specific application.

6.2 Repair
In case of reparation of the products it is recommended to follow Stucchi's specific instructions and use spare parts, tools and documentation supplied by Stucchi only.
Please contact Stucchi Technical Support for the above specific information.

7.0 Disposal instructions
Do not litter the product after use.
The product must be disposed according to the local law and the requirements of the relevant local authorities.
Details about product composition are reported in the catalogs on stucchigroup.com.
The user is responsible for the waste characterization and its disposal.

IT IS THE RESPONSIBILITY OF THE USER TO SELECT, INSTALL AND USE THE QUICK RELEASE COUPLING IN THE CORRECT WAY.

The texts, data and illustrations indicated in this catalogue, may be changed by Stucchi S.p.A at any time without notice.
For more information please contact the Stucchi Technical Support, in any case we remind for **last updated version always applied at time of installation, see latest written Instruction on stucchigroup.com before selecting or using Stucchi products.**

Conversion table

Stucchi®

Unit of measure

Anglo Saxon *Imperial System* (USA)	Characteristic	International *Metric System (SI)*
Pound/Square Inch (psi)	PRESSURE	Mega Pascal (MPa); 1 MPa = 10 bar
Gallon per minute (US-gpm)	FLOW IN HYDRAULIC	Liter per minute (l/min)
Pound force (lbf)	FORCE	Newton (N); 1 Newton (N) = 0,1019 Kg/Force
Pound force per Foot (lbf ft)	TORQUE	Newton meter (Nm)
Fahrenheit degree (°F)	TEMPERATURE	Celsius degree (°C)
Inch (Inch) Foot (ft)	LENGTH	Millimeter (mm) Meter (m)
Pound (lb)	WEIGHT	Kilogram (kg)

Conversions

USA > SI	SI > USA
1 psi = 0,0069 Mpa	1 Mpa = 145 psi
1 gpm = 3,78 l/min	1 l/min = 0,265 CPM
1 lbf = 4,444 N	1 N = 0,225 lbf
1 lbf ft = 1,357 Nm	1 Nm = 0,737 lbf ft
°F = (°C*1,8)+32	°C = (°F-32)/1,8
1 in = 25,4 mm 1 ft = 0,3048 m	1 mm = 0,03937 in 1 m = 3,28084 ft
1 lb = 0,4536 kg	1 kg = 2,2046 lb

Seals, fluids, temperatures

Stucchi®

Seals

Temperature range

It is a generic indication of the seal temperature range given by Stucchi seal suppliers after laboratory tests made in standard conditions. It is given for Customer information only (is intended as a guide but not as a warranty).
It does not means all the Stucchi products are homologated for such seal temperature range. Fluid in use, external condition (radiant heating, temperature changes…), internal condition (duration of exposure, state changes of the fluid, thermal expansion…) should be taken into account.
Every application has to be analyzed by the Customer prior to do the final choice. Please contact us for further information.

Compatibility

Verify that the seals of the product are compatible with the medium used. Make sure that no other not compatible fluids do not come in contact with the seals in case of maintenance or due to external environment condition.
Do not use Stucchi product with flammable, explosive or dangerous fluids. We always recommend to do a customer verification & validation test to approve the products in the specific application prior to do the final choice. Please contact us for further information.

Fluids

Material	Compatibility
Nitrile NBR	Mineral oils and grease *(ok for water/glycol max 60°C)*
FKM (Viton®)	Mineral oils and grease *(not compatible with water & glycol)*
EPDM (Ethylene Propylene)	Water *Water & Glycol with no contamination* *This elastomer must not come in contact with mineral oils or grease!*

Hydraulic oil

Water

Others

Temperature

Temperature range Celsius degrees °C	Seal coumpound	Temperature range Fahrenheit degrees °F
Oil -20 > +100 **Water** +5 > +60	NBR (Nitrile)	**Oil** -4 > +212 **Water** +41 > +140
-15 > +180	FKM (VITON®)	+5 > +356
-40 > +150	EPDM (Ethylene Propylene)	-40 > +302
-25 > +300	KALREZ®	-13 > +572
-30 > +130	HNBR	-22 > +266
-50 > +150	FLUOROSILICON	-58 > +302
-50 > +150	SILICON	-58 > +302
-40 > +100	NEOPRENE	-40 > +212
-50 > +180	PTFE (Teflon®)	-58 > +356

Size, different references

Stucchi®

Body size (Inch)	ISO size (Europe)	Dash size (USA)
1/8	(4)	-2
1/4	6.3	-4
3/8	10	-6
1/2	12.5	-8
5/8	16	-10
3/4	19	-12
1	25	-16
1-1/4	31,5	-20
1-1/2	40	-24
2	50	-32

Quick Coupling Glossary

Stucchi®

Brinelling

Markings of the locking balls on the metallic parts where they are in contact with high impulse applications.

Burst pressure

Value of pressure at which a coupling loses its ability to retain pressure.

Dis/Connect force

Value of force required to dis/connect the couplings without residual pressure in the system.

Connect torque

Value of torque required to connect the couplings without residual pressure in the system.

Coupled

Male coupling half connected with the female coupling half.

Disconnect torque

Value of torque required to disconnect the couplings without residual pressure in the system.

Interchangeability

Possibility of male coupling half or female coupling half to connect with the other brands of couplings.

ISO Size

Size indicated by ISO standard (the International Organization for Standardization) related to interchangeability of the couplings.

ISO Norm

The norms used as reference for the test method are two: ISO 7241-2 issued in 1986 then canceled and replaced in 2017 by the new ISO 18869.

Mechanical connection

Method or type of connection that creates retention between the male coupling half and female coupling half.

Max. flow suggested

Max. flow suggested by Stucchi

Max. operating pressure

The maximum peak of pressure at which can be used the product.

Max. residual pressure during connection

Max. allowed residual pressure (pressure trapped in the circuit) to connect the coupler.

Max. residual pressure during disconnection

Max. allowed residual pressure (pressure trapped in the circuit) to disconnect the coupler.

Pressure drop

Pressure lost between the inlet and the outlet of the coupling.

Quick coupling

A quick, easy, sure product to repeatedly connect and disconnect almost any fluid line in a system and to turn off the flow immediately upon disconnect.

Rated flow

Typical rated flow relative to the size, in accordance with ISO norm standard.

Size

Nominal size of coupling body.

Spillage

Indicative value of the fluid loss per couple - uncouple cycle without residual pressure. Checked on sample in accordance with ISO norm test method.

Temperature range

See page 251.

Tightening torque

Recommended torque to apply during connection on screw to connect couplings to prevent accidental disconnection.

Valve system

Type of valve used to shut-off medium flow in the male or female coupling half once disconnected.

Note:

Stucchi®

FLUID POWER COMPANY
Hydraulics, Pneumatics & Engineering

PT. SDA GLOBAL

Head Office
Jl. Margomulyo Indah 1A No. 7-8
Surabaya 60186, Jawa Timur - Indonesia
Telephone: +62 31 748 2190, 748 2191
WhatsApp: +62 812 2088 8800
Email: headoffice@sda.co.id

Jakarta Office
Komp. Puri Mutiara Blok BD No. 8
Jl. Raya Griya Utama, Sunter Agung
Kec. Tanjung Priok, Jakarta 14350 - Indonesia
Telephone: +62 21 3888 8800
WhatsApp: +62 813 1833 8800
Email: jkt@sda.co.id

SDA Cikarang
Jl. Kapuk Timur Blok F23 No. 11AB
Delta Silicon III, Cicau, Cikarang 17530
Bekasi, Jawa Barat - Indonesia
Telephone: +62 21 8997 9880
WhatsApp: +62 813 1877 8800
Email: ckr@sda.co.id

SDA Surabaya
Komp. Raden Saleh Permai Kav. 19-20
Jl. Raden Saleh No. 45
Surabaya 60174, Jawa Timur - Indonesia
Telephone: +62 31 546 8800, 546 7700
WhatsApp: +62 811 1066 8800
Email: sby@sda.co.id

SDA Semarang
Komp. THD Blok C No. 25-26
Jl. KH. Agus Salim
Purwodinatan, Semarang 50137
Jawa Tengah - Indonesia
Telephone: +62 24 8657 8800
WhatsApp: +62 813 1822 8800
Email: srg@sda.co.id

SDA Balikpapan
Jl. Mayjen. Sutoyo No. 39
Gunung Sari Ulu, Balikpapan 76122
Kalimantan Timur - Indonesia
Telephone: +62 542 776 8800
WhatsApp: +62 813 1855 8800
Email: bpp@sda.co.id

www.sda.co.id

Online Store
tokoSDA.com

Hotline +62 31 9900 8800
WhatsApp +62 822 8080 8800

sda.id sdaindonesia @sdaglobal